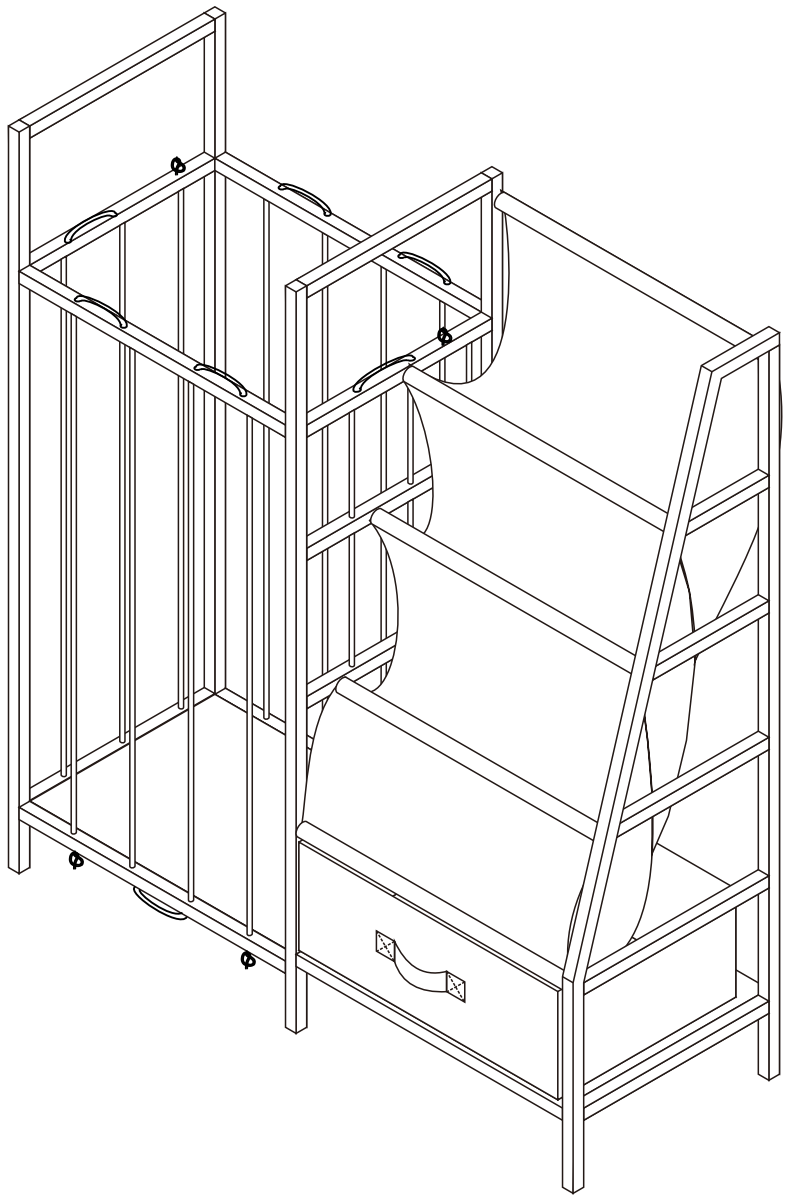

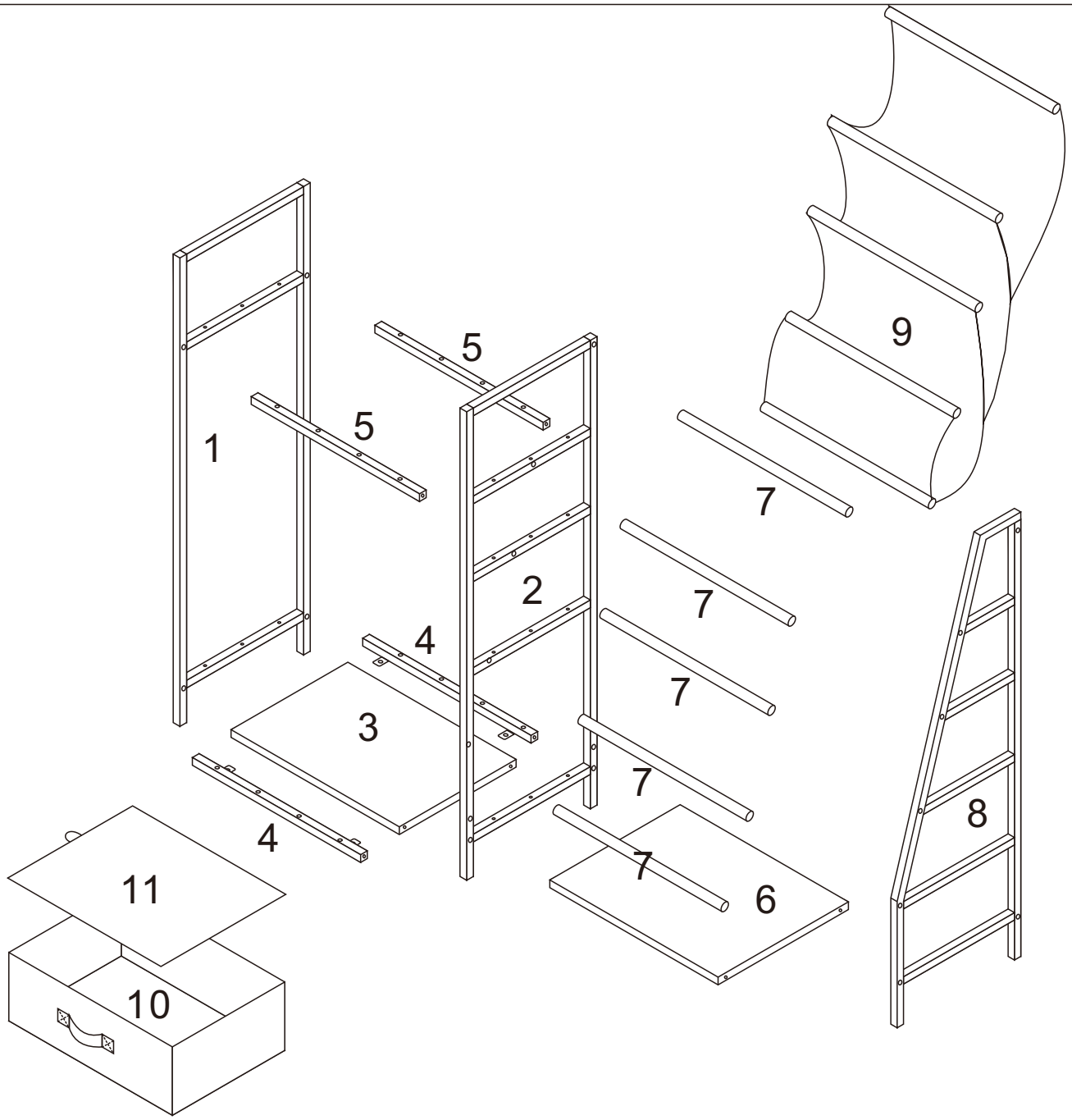

A M6x30mm x18	B ST6. 3x48mm x4	C x6	D M4x12mm x4	E x2
F x2	G x2	H x1		

01

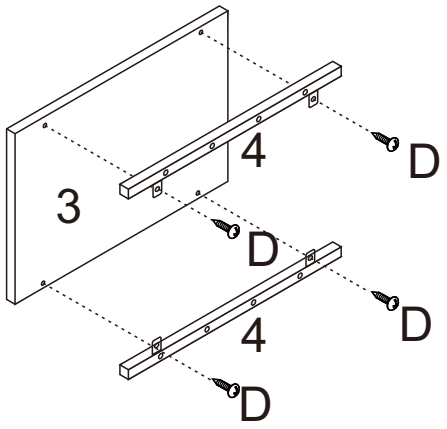

D

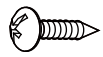

M4x12mm
x4

02

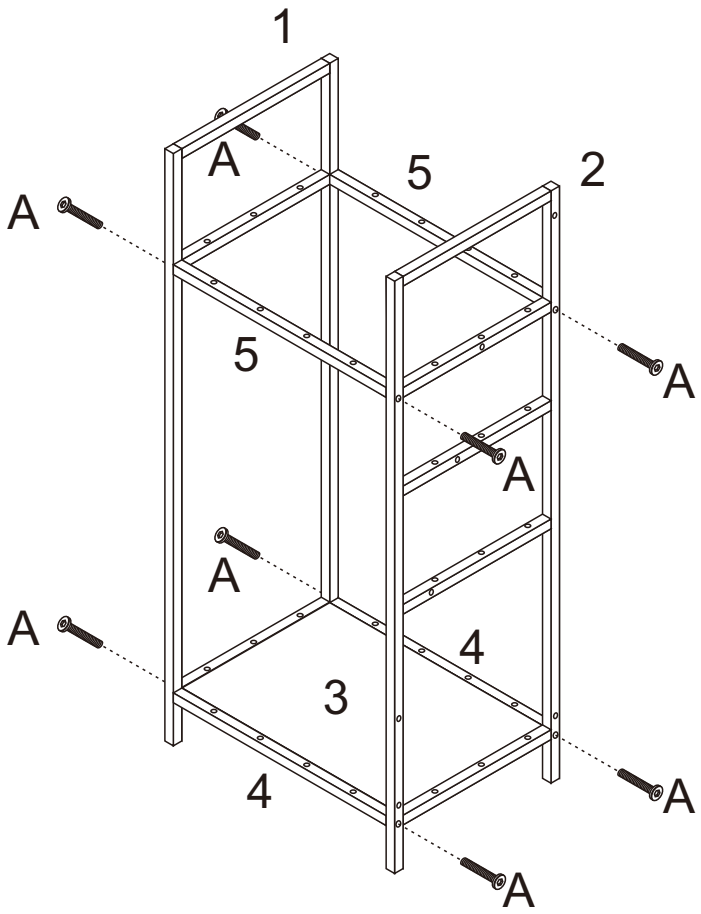

A



M6x30mm
x8

03

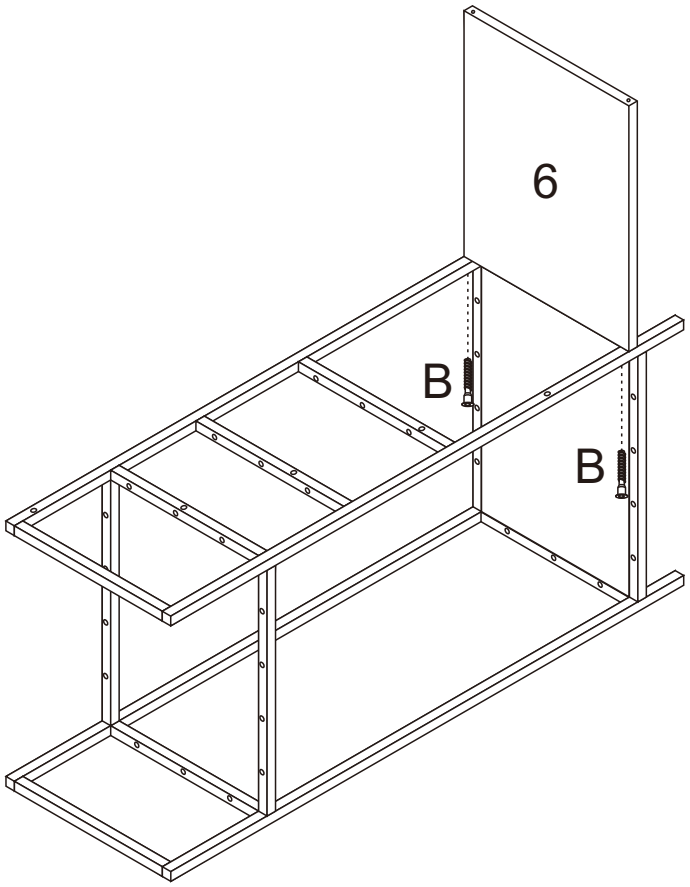

B



ST6. 3x48mm
x2

04

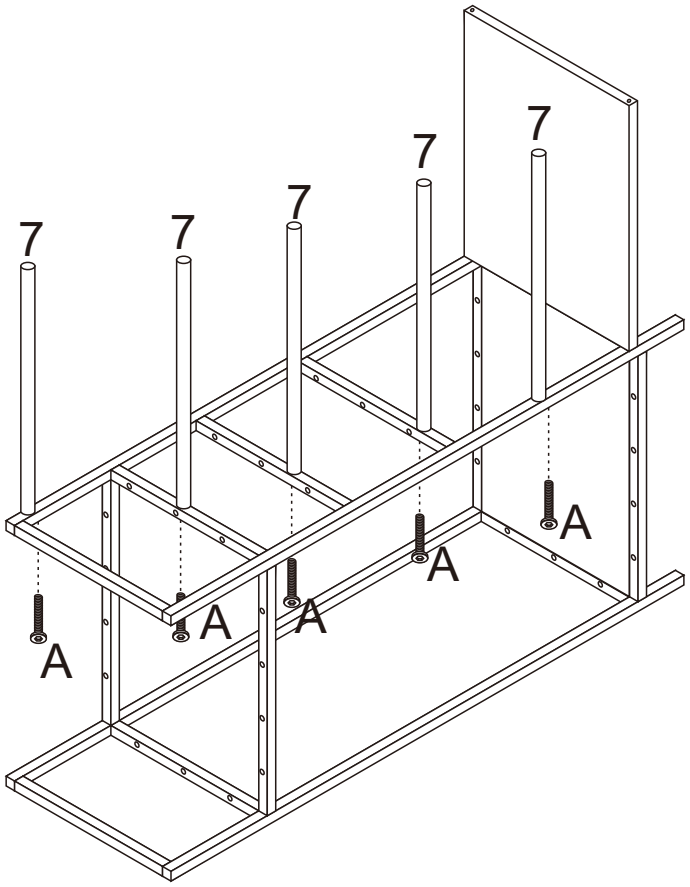

A



M6x30mm
x5

05

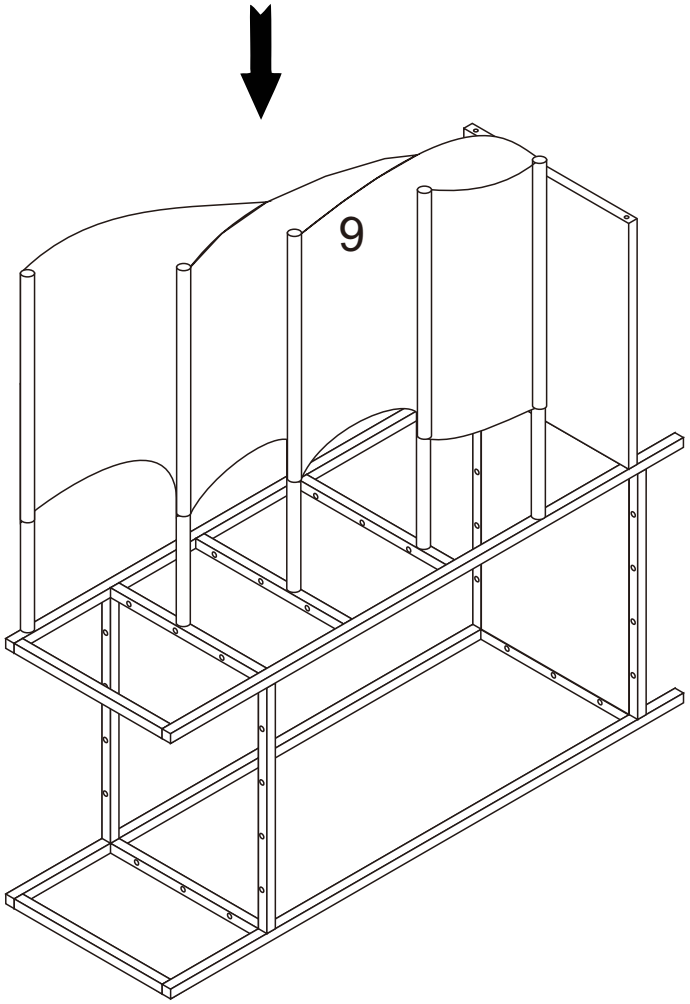

06

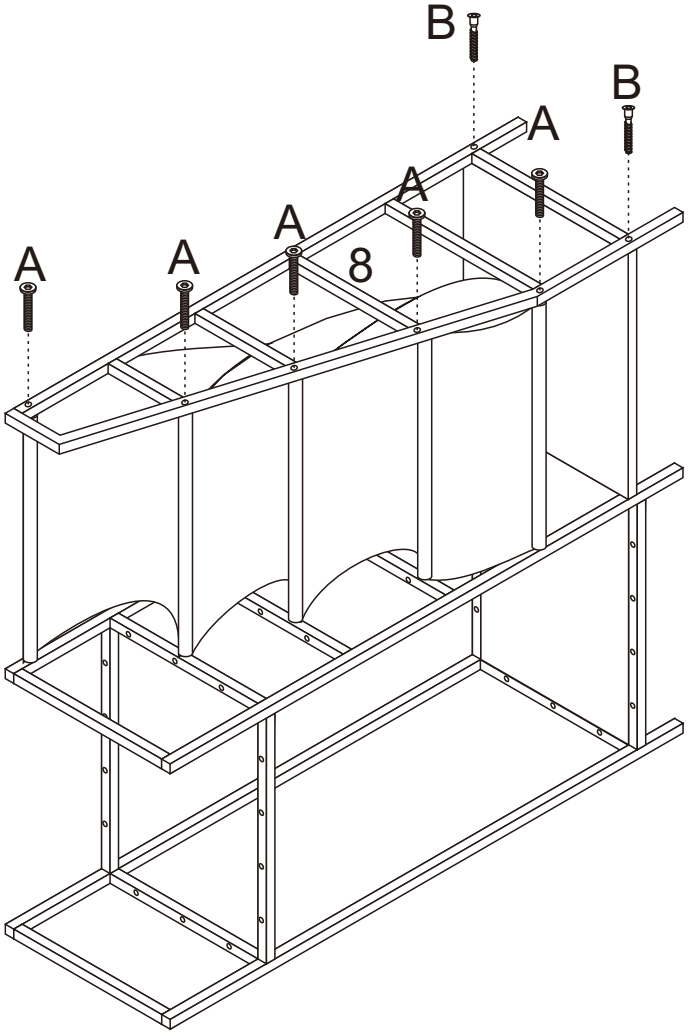

B



ST6. 3x48mm
x2

A



M6x30mm
x5

07

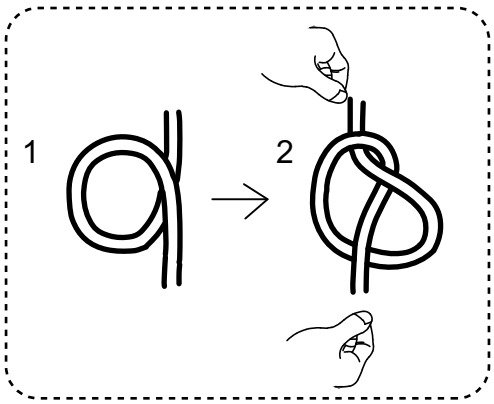

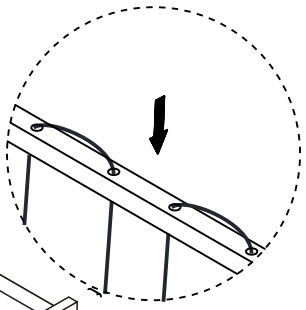

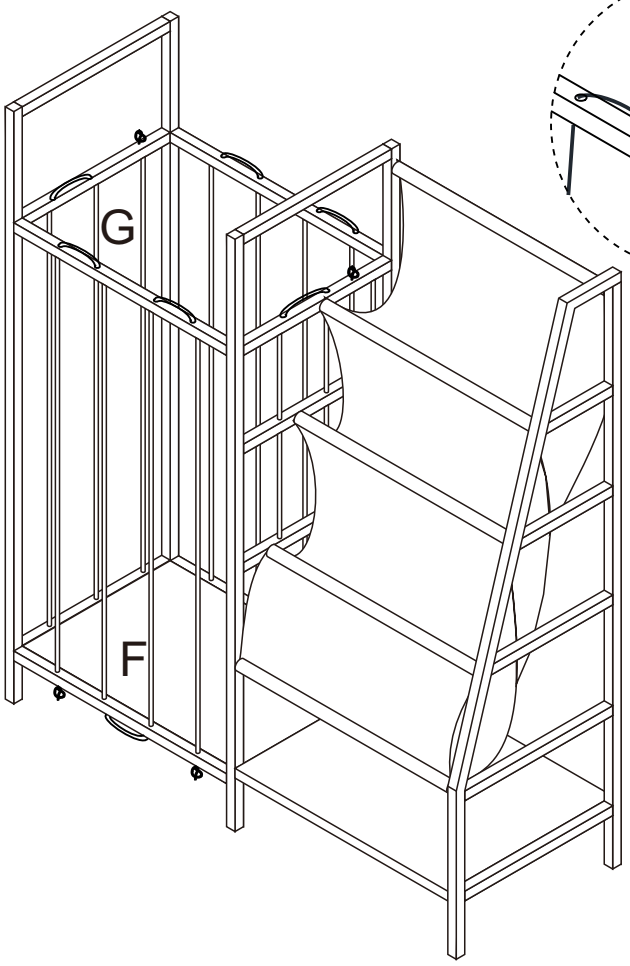

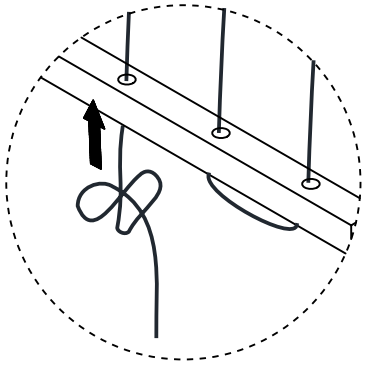

F



x2

G



x2

08

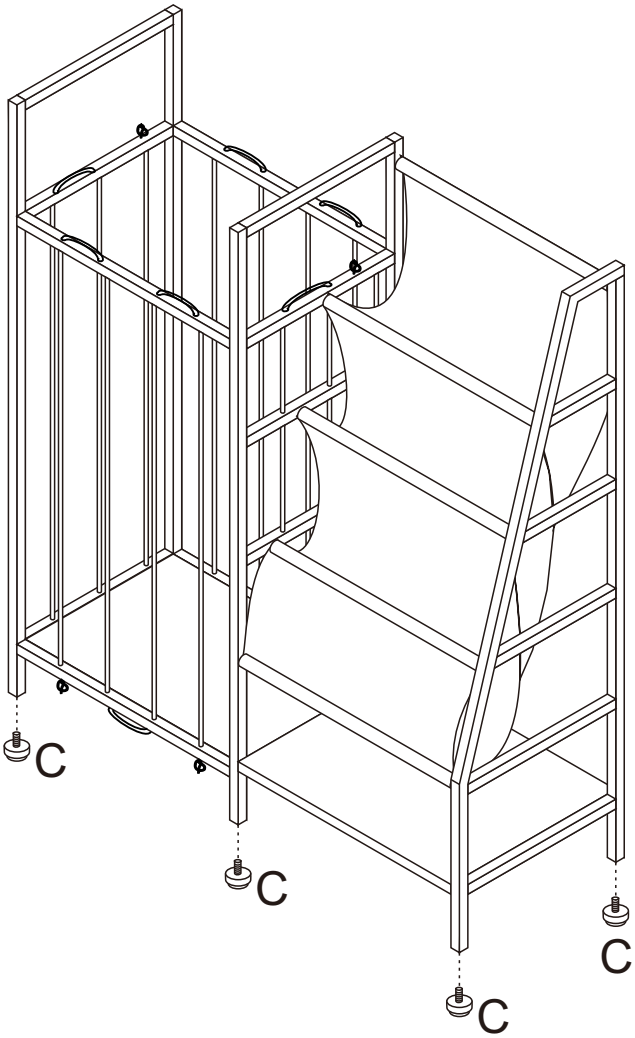

C

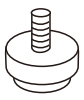

x6

09

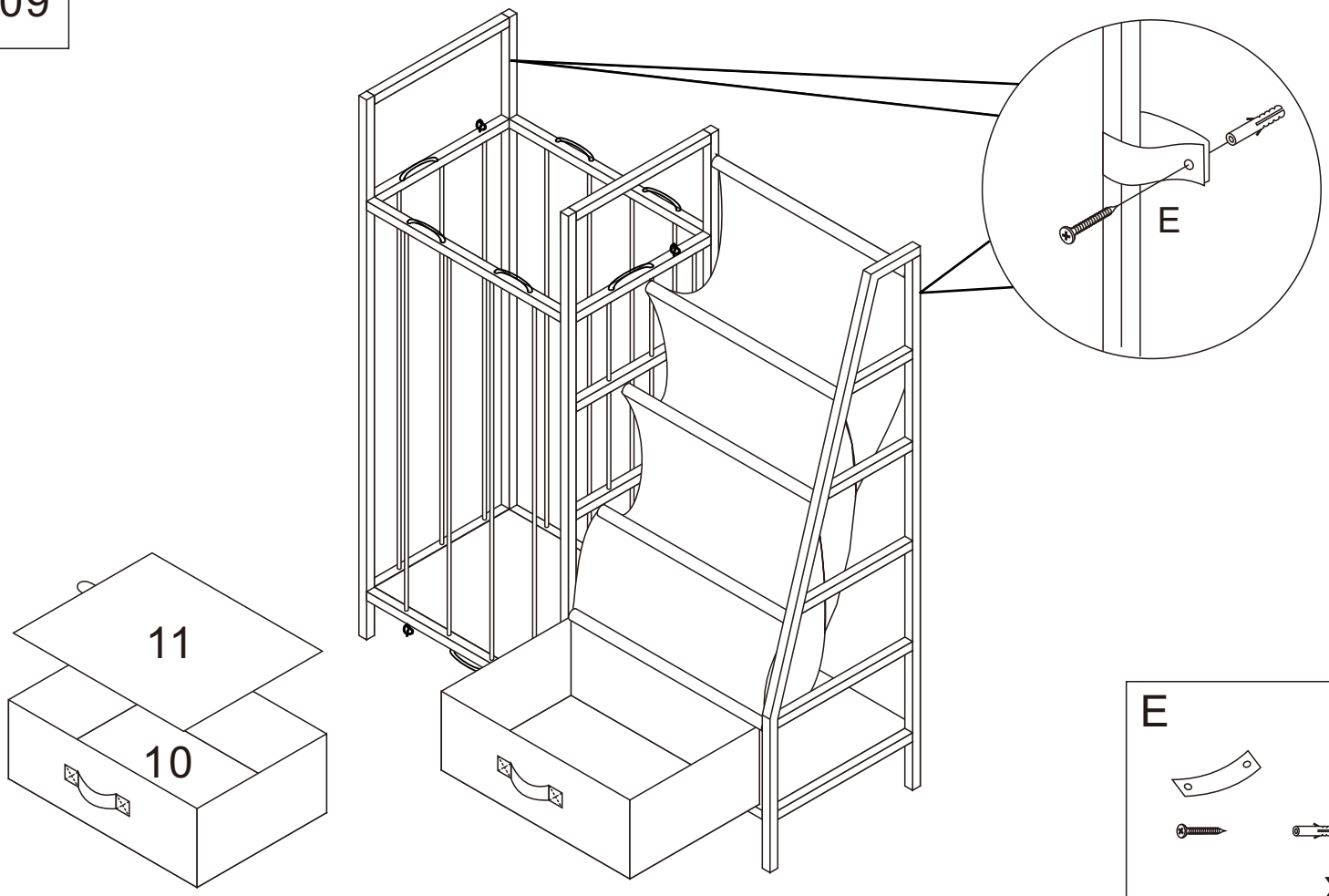

E

x2

10

