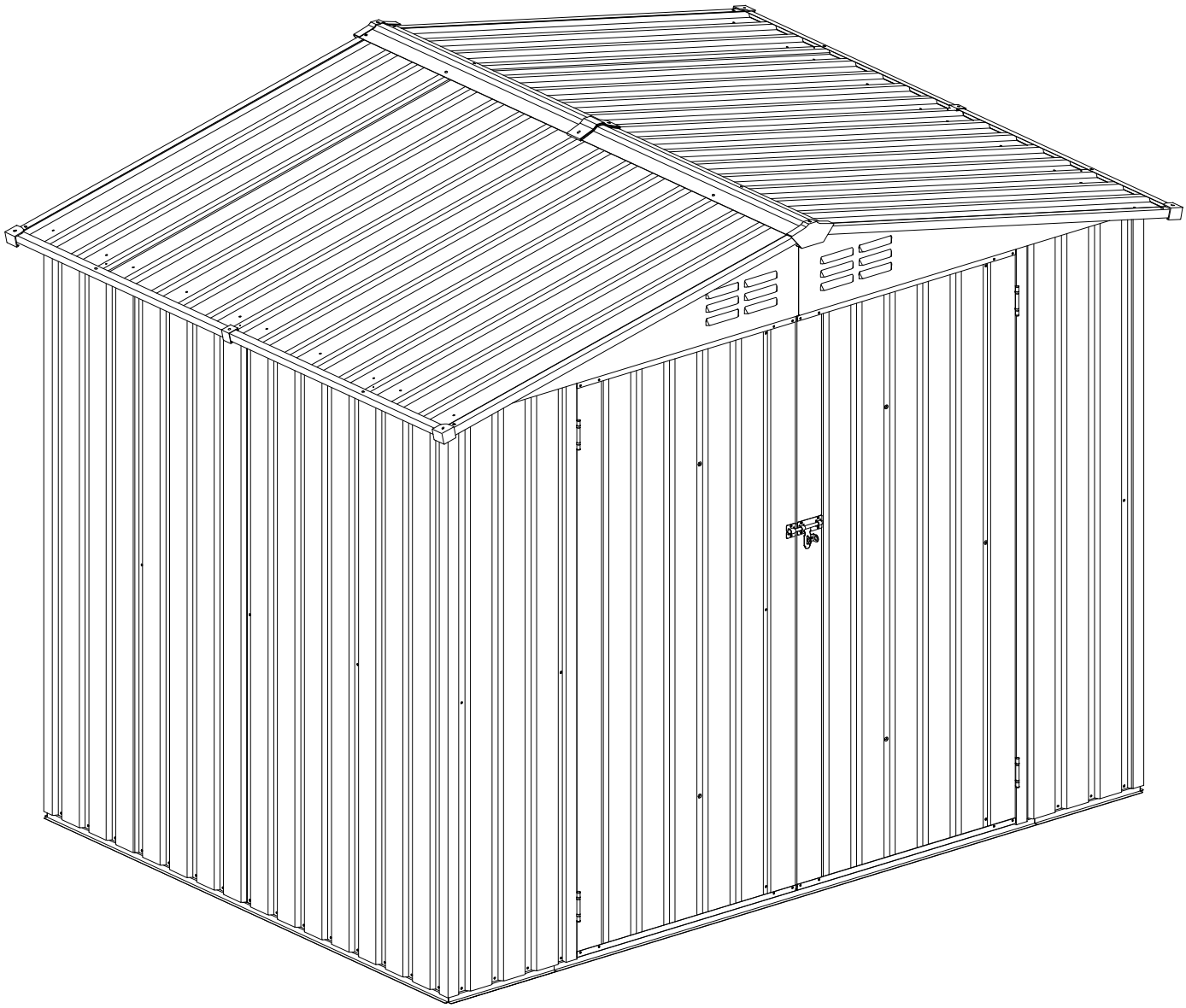

PART LIST

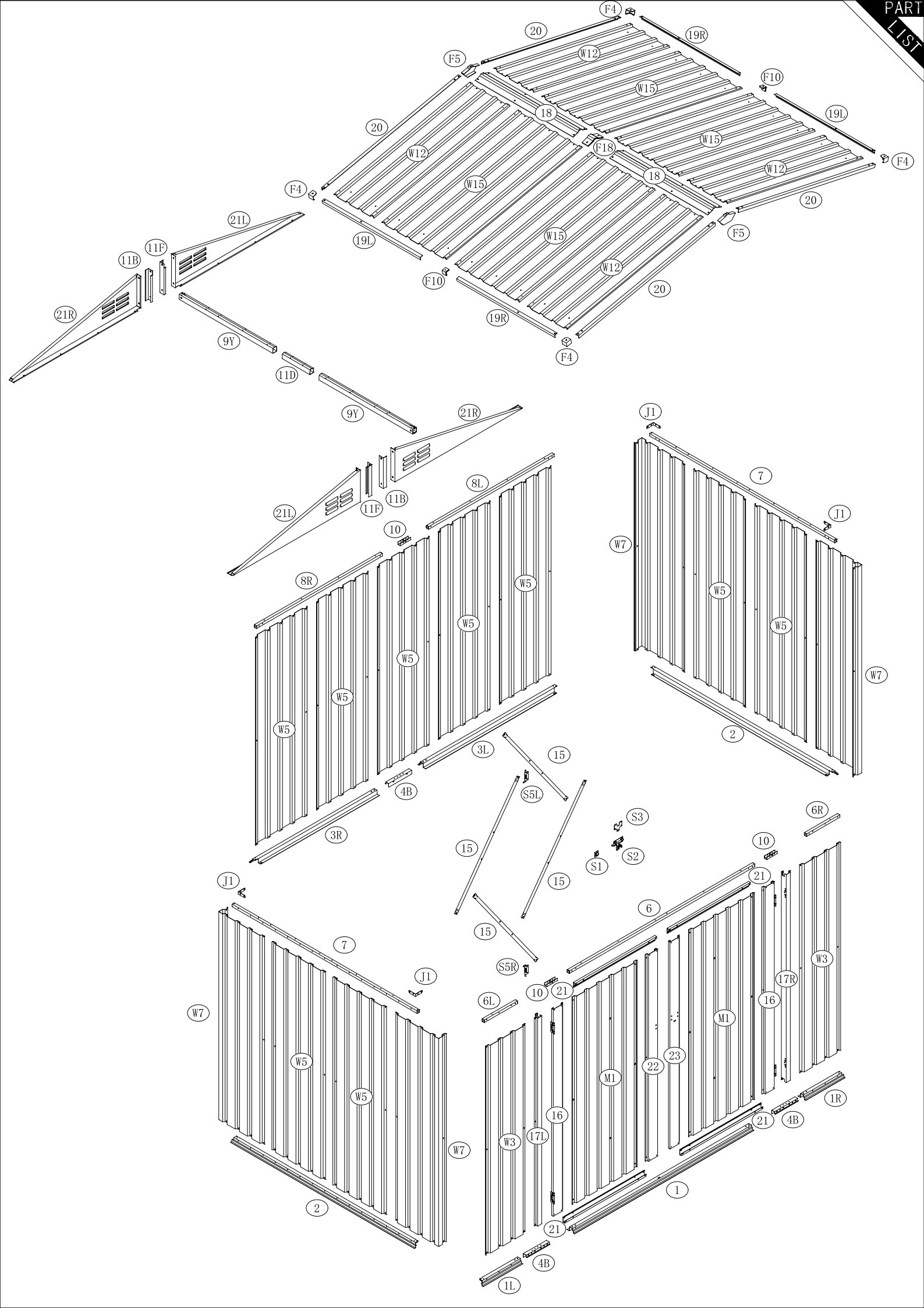
F4
20
19R
F5
W12
F10
W15
18
19L
20
W12
F18
W15
F4
W12
18
W15
F4
20
21L
19L
W15
F5
11F
11B
W12
F10
20
21R
19R
9Y
F4
11D
9Y
21R
J1
7
8L
11B
21L
11F
J1
10
W7
8R
W5
W5
W5
W5
W5
W5
W7
W5
2
3L
15
4B
S5L
S3
6R
3R
15
10
S2
S1
15
21
J1
6
15
7
S5R
W3
J1
10
21
17R
6L
16
W7
M1
W5
23
22
M1
W5
1R
16
21
4B
W3
17L
W7
1
2
21
4B
1L

NO.	PART.	Qty.
1L	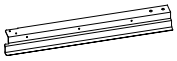	1
1		1
1R	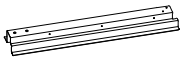	1
2		2
3L		1
3R		1
4B	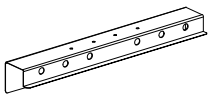	3
6L	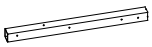	1
6		1
6R	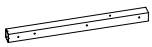	1
7	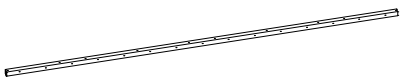	2
8L		1
8R		1
9Y		2

NO.	PART.	Qty.
10	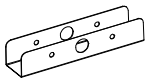	3
11D	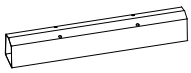	1
11F	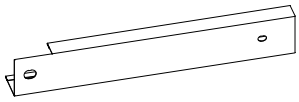	2
11B	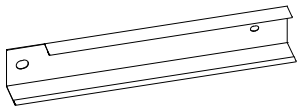	2
15		4
16	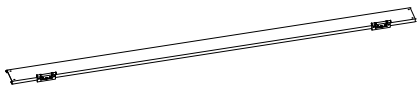	2
17L		1
17R	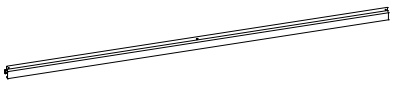	1
18	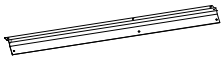	2
19L	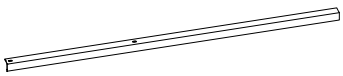	2
19R	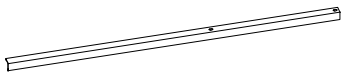	2
20		4
21		4
21L	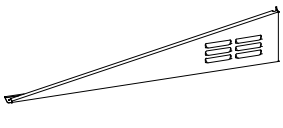	2

NO.	PART.	Qty.
21R		2
22		1
23	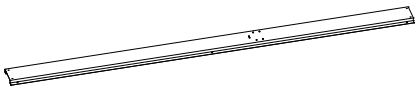	1
W3		2
W5	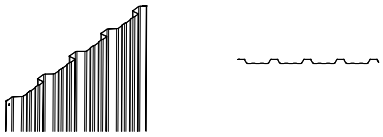	9
W7	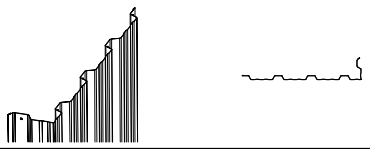	4
W12		4
W15	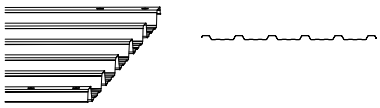	4
M1		2
J1	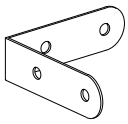	4
F4		4
F5	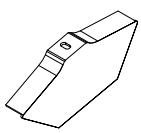	2
F7		82
F8	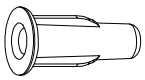	20

NO.	PART.	Qty.
F9	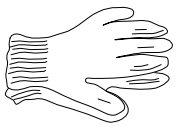	2
F10	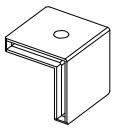	2
F18	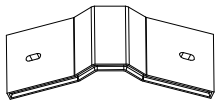	1
S1		1
S2	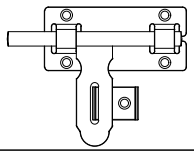	1
S3	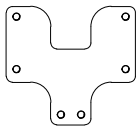	1
S4	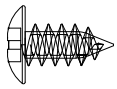	282
S5L	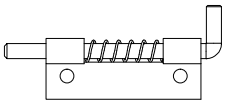	1
S5R	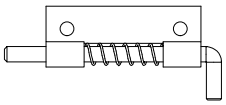	1
S6	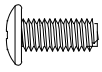	48
S6A		10
S7		52
S8	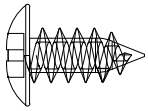	8
S9		4

NO.	PART.	Qty.
S12	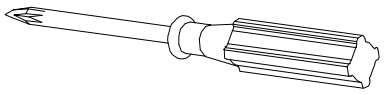	1
S15	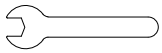	1
S35	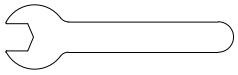	1
Q13	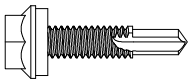	4
Q17		2
Q19		4
Q20		2
Q26	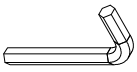	1
Q27	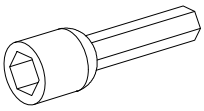	1
Q36		2

NO.	PART.	Qty.

NO.	PART.	Qty.
1L		1
1		1
1R		1
4B		2
S4		8

NO.	PART.	Qty.
3L		1
3R		1
4B		1
S4		4

NO.	PART.	Qty.
2		2
S4		8

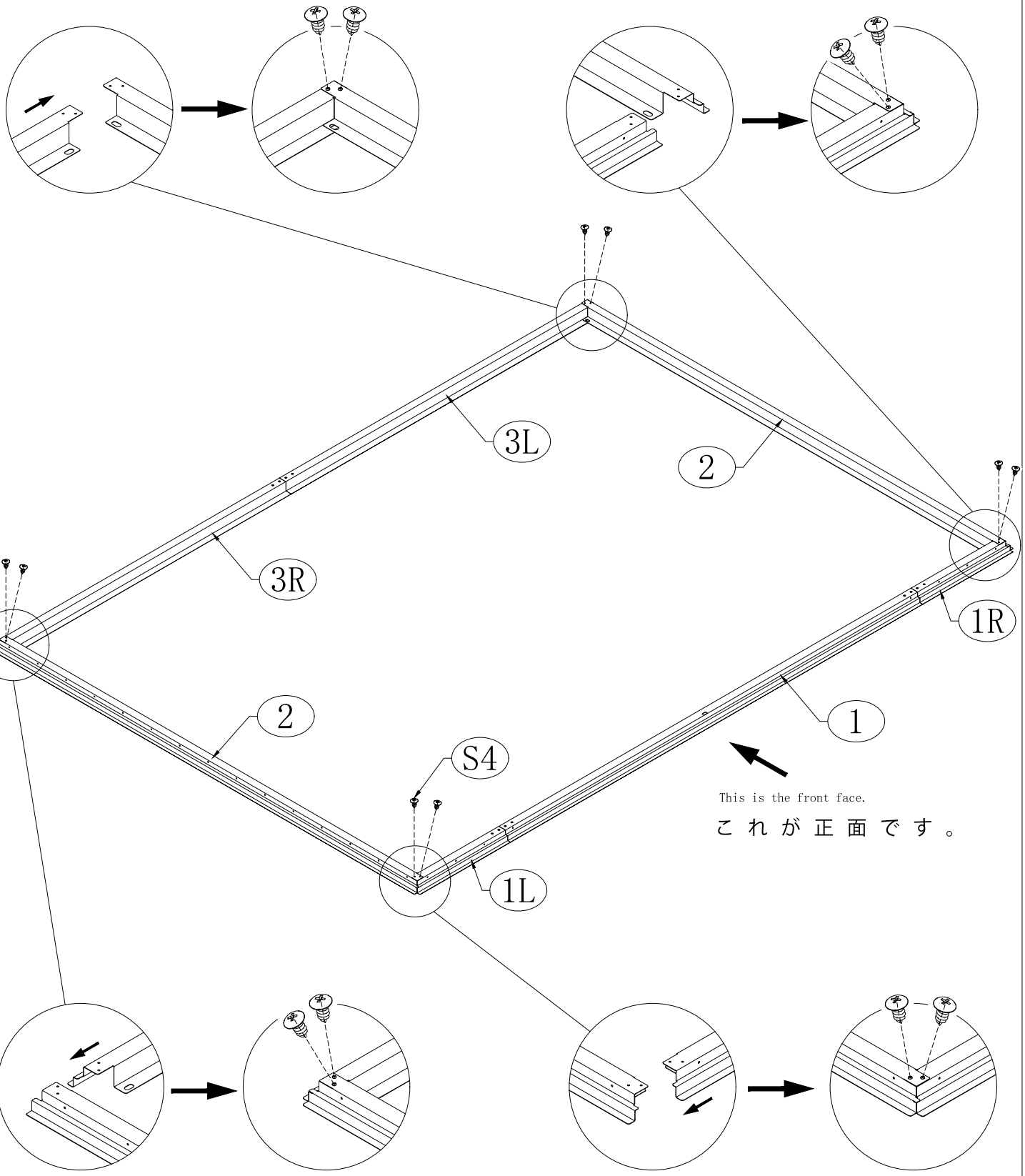

NO.	PART.	Qty.
6L		1
6		1
6R		1
10		2
S4		8

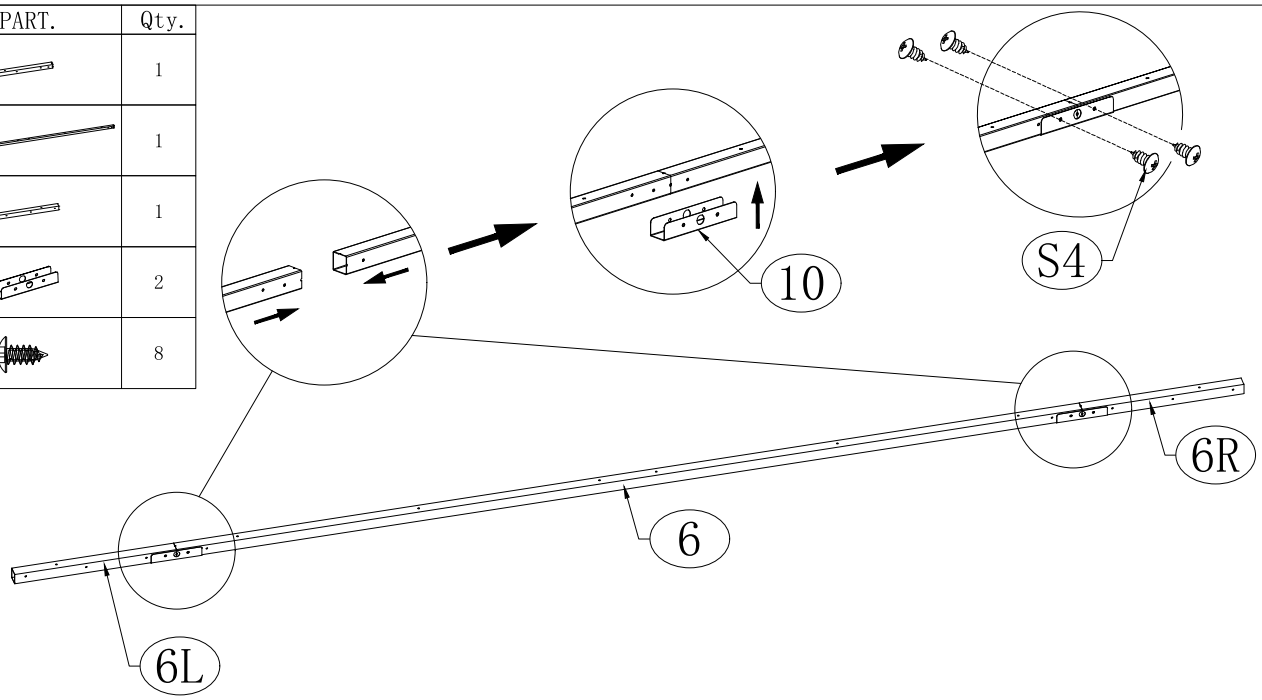

NO.	PART.	Qty.
7		2
J1		4
S4		8

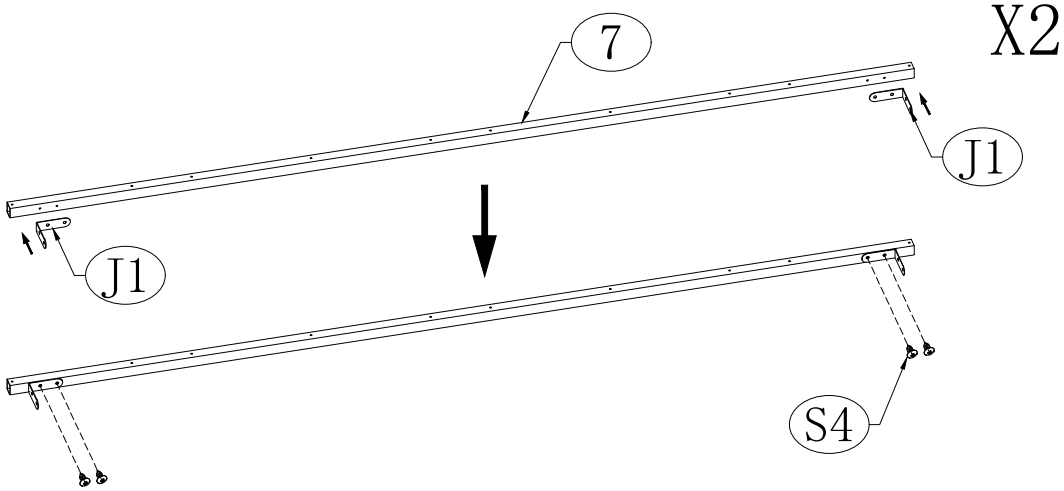

NO.	PART.	Qty.
8L		1
8R		1
10		1
S4		4

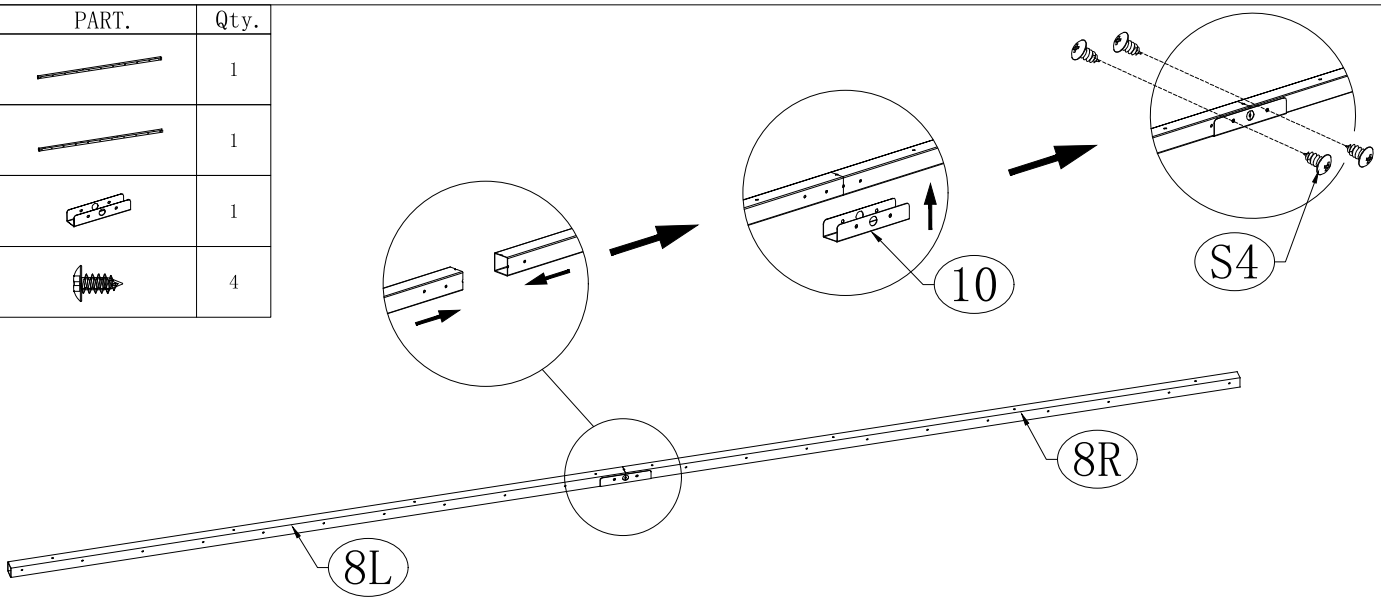

NO.	PART.	Qty.
W7	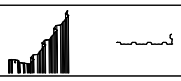	1
W3		1
S4		6
S6		1
S7		1

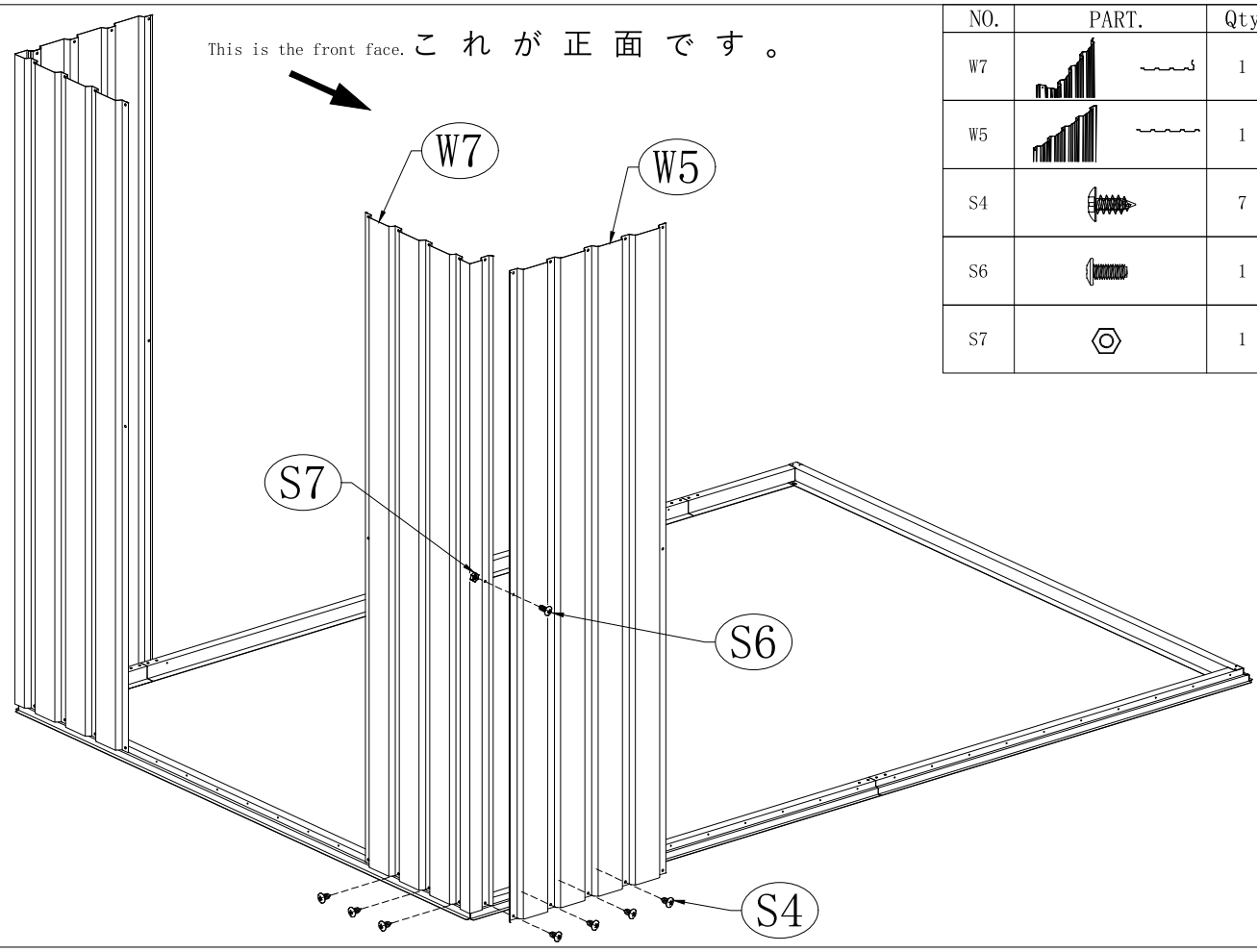

NO.	PART.	Qty.
W7		1
W5		1
S4		7
S6		1
S7		1

NO.	PART.	Qty.
S4		6

NO.	PART.	Qty.
W7	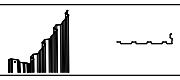	1
W3		1
S4		6
S6		1
S7		1

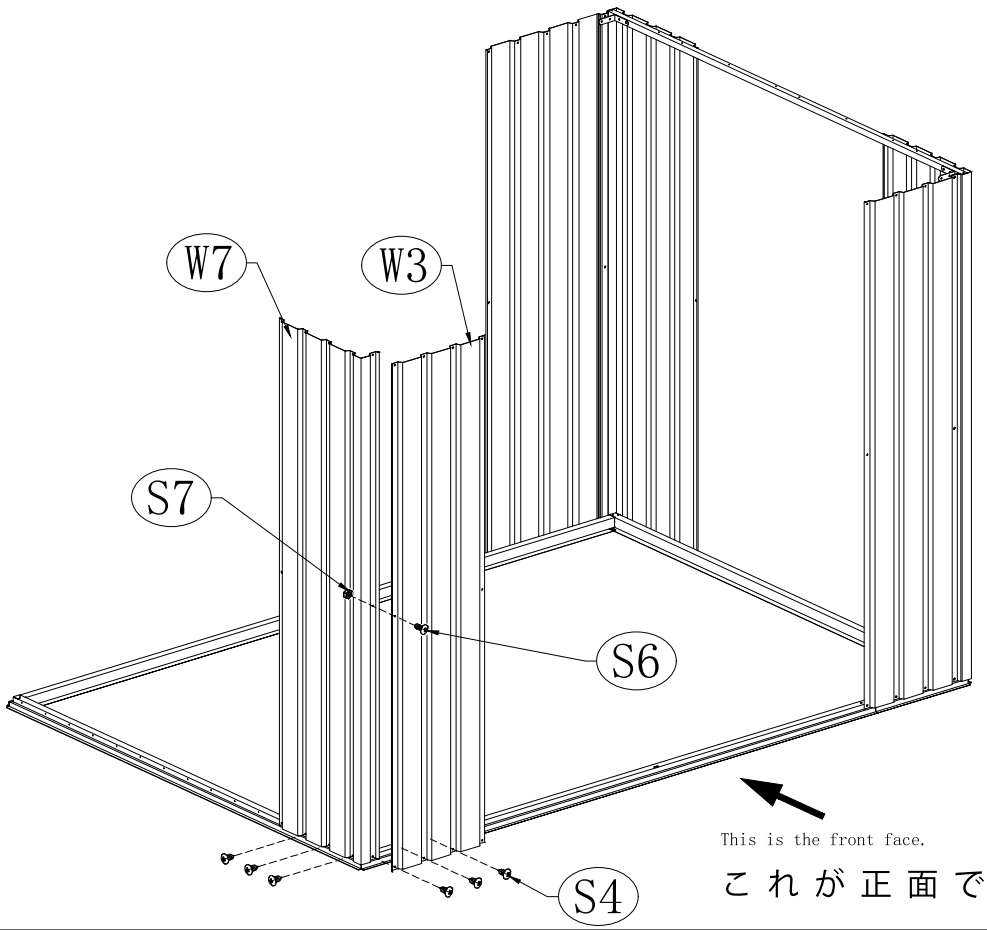

NO.	PART.	Qty.
W7	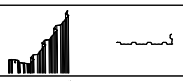	1
W5		1
S4		7
S6		1
S7		1

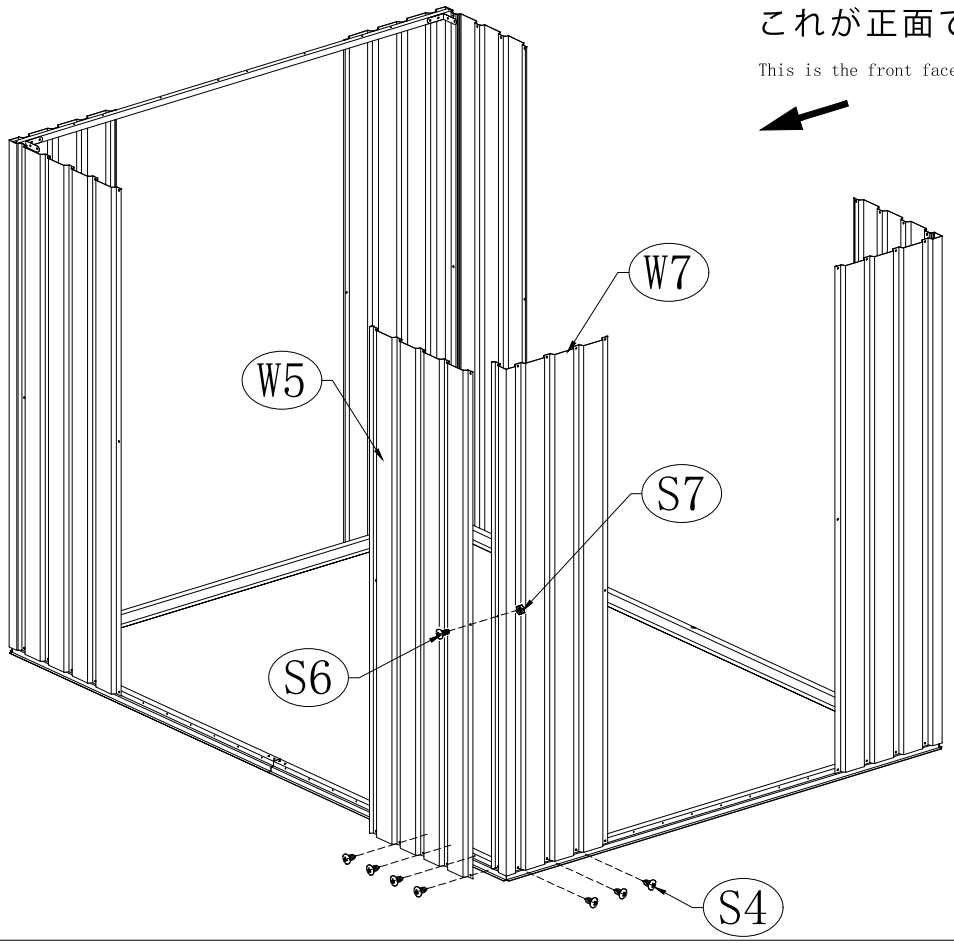

NO.	PART.	Qty.
S4		18

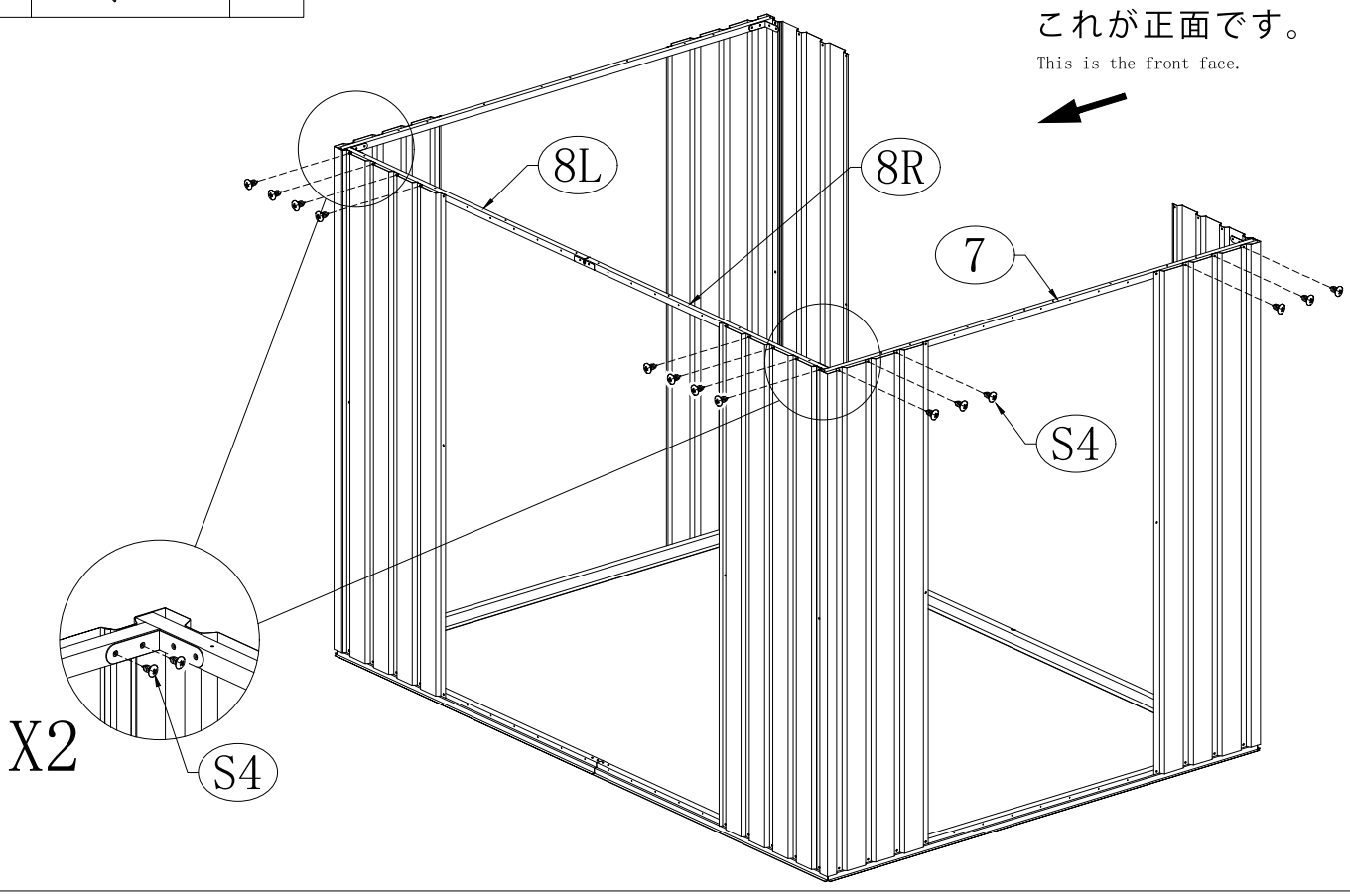

NO.	PART.	Qty.
S4		10

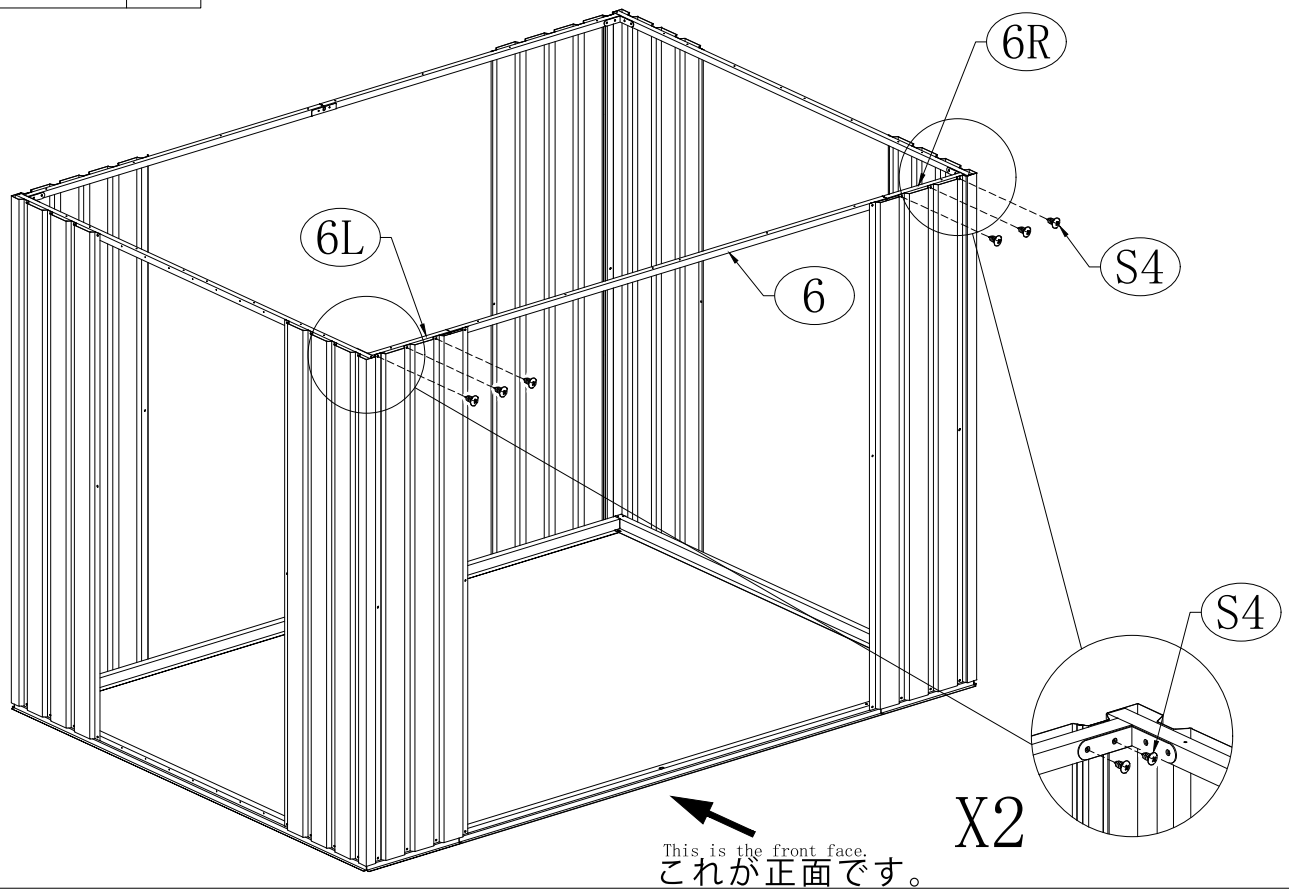

NO.	PART.	Qty.
W5		2
S4		18
S6		3
S7		3

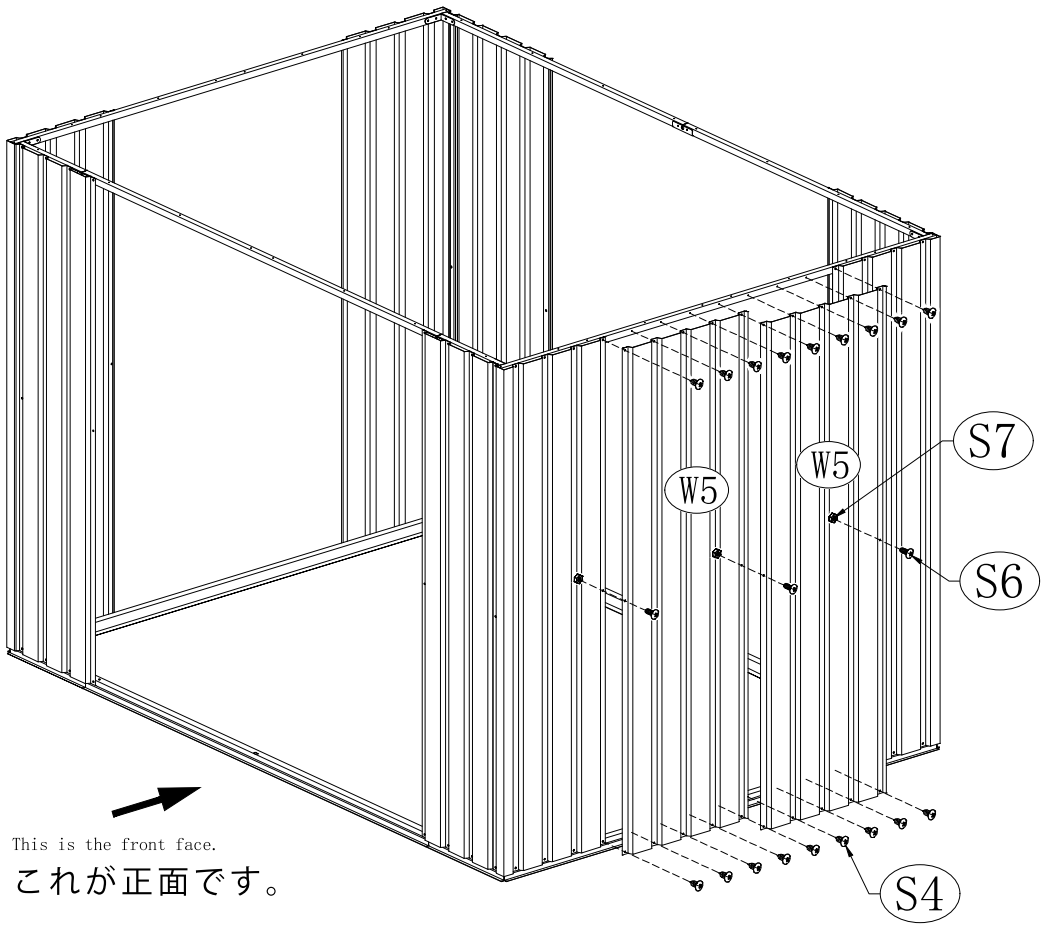

NO.	PART.	Qty.
W5	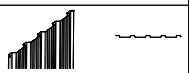	3
S4		26
S6		4
S7		4

これが正面です。
This is the front face.

NO.	PART.	Qty.
W5		2
S4		18
S6		3
S7		3

NO.	PART.	Qty.
17L		1
17R		1
S4		8
S6		2
S7		2

内側：
Inside:

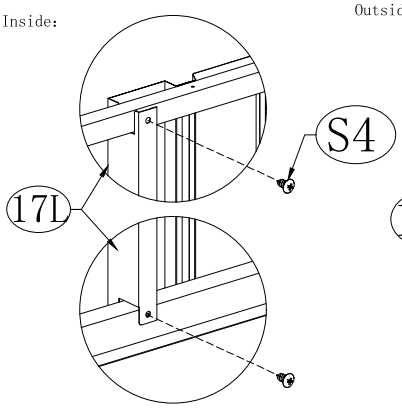

外観：
Outside:

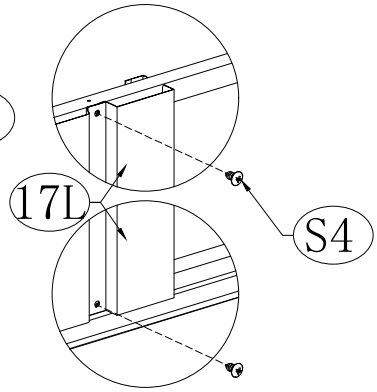

内側：
Inside:

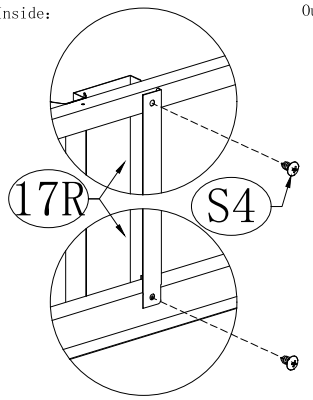

外観：
Outside:

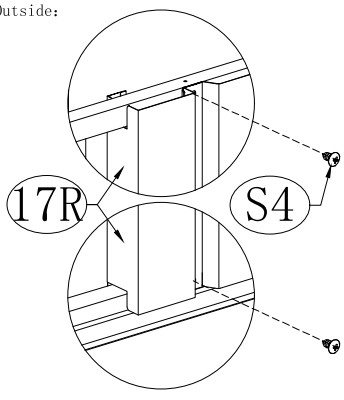

NO.	PART.	Qty.
11F		2
11B		2
21L		2
21R		2
S4		16
S6		2
S7		2

NO.	PART.	Qty.
9Y		2
11D		1
Q13		4
Q17		2
Q19		4
Q20		2
Q36		2

NO.	PART.	Qty.
W12		2
W15		4
S4		40
F7		40

NO.	PART.	Qty.
F18		1
S8		2
F7		2

NO.	PART.	Qty.
W12		2
S4		12
F7		12

NO.	PART.	Qty.
20		4
S4		8
F7		8

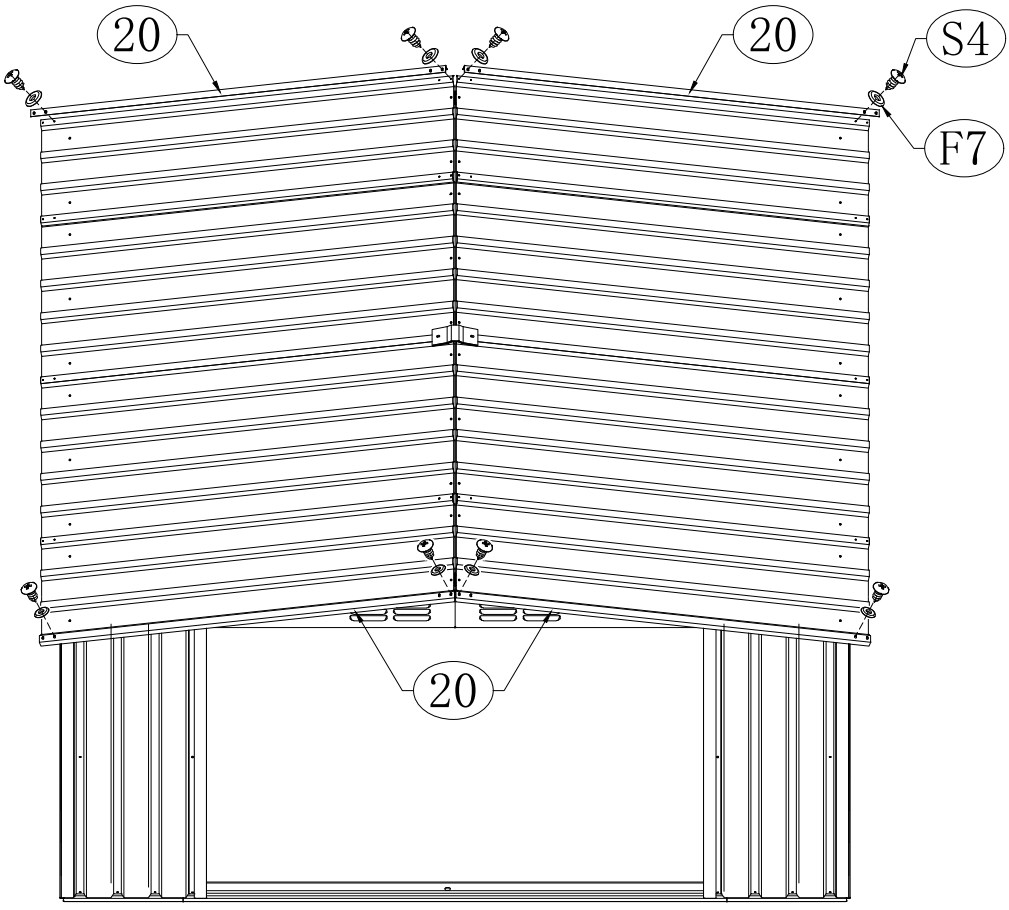

NO.	PART.	Qty.
19L		2
19R		2
S4		4
S8		6
F4		4
F7		10
F10		2

NO.	PART.	Qty.
F8		20

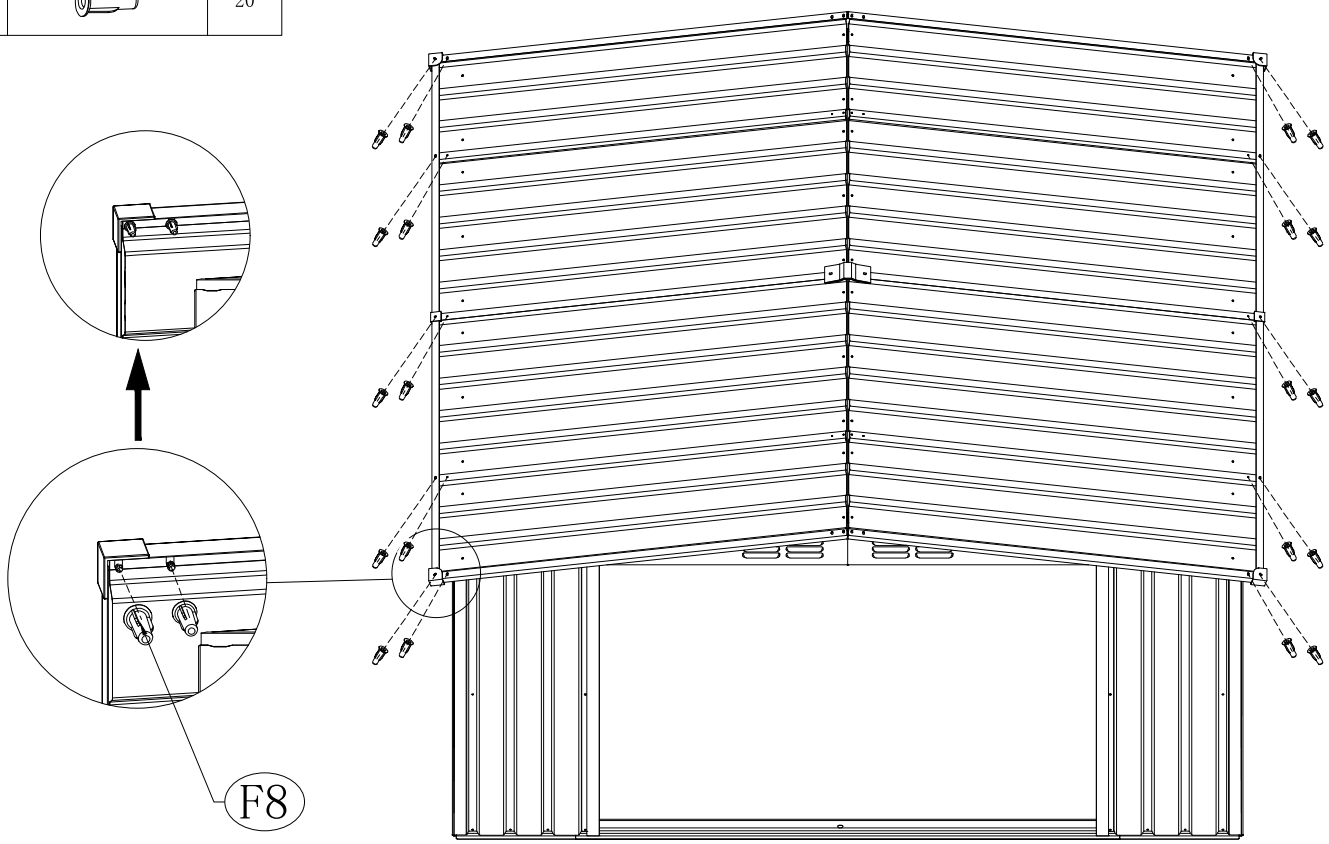

NO.	PART.	Qty.
18		2
F5		2
S4		10
F7		10

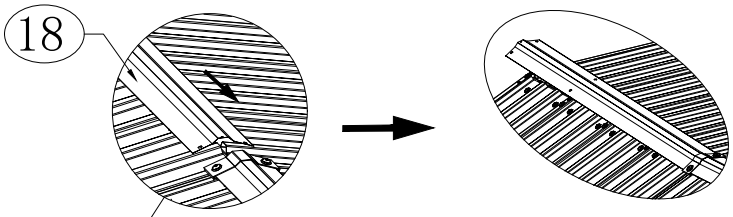

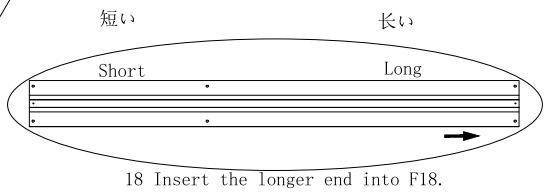

18 Insert the longer end into F18.

18 長い方の端をF18に差し込みます。

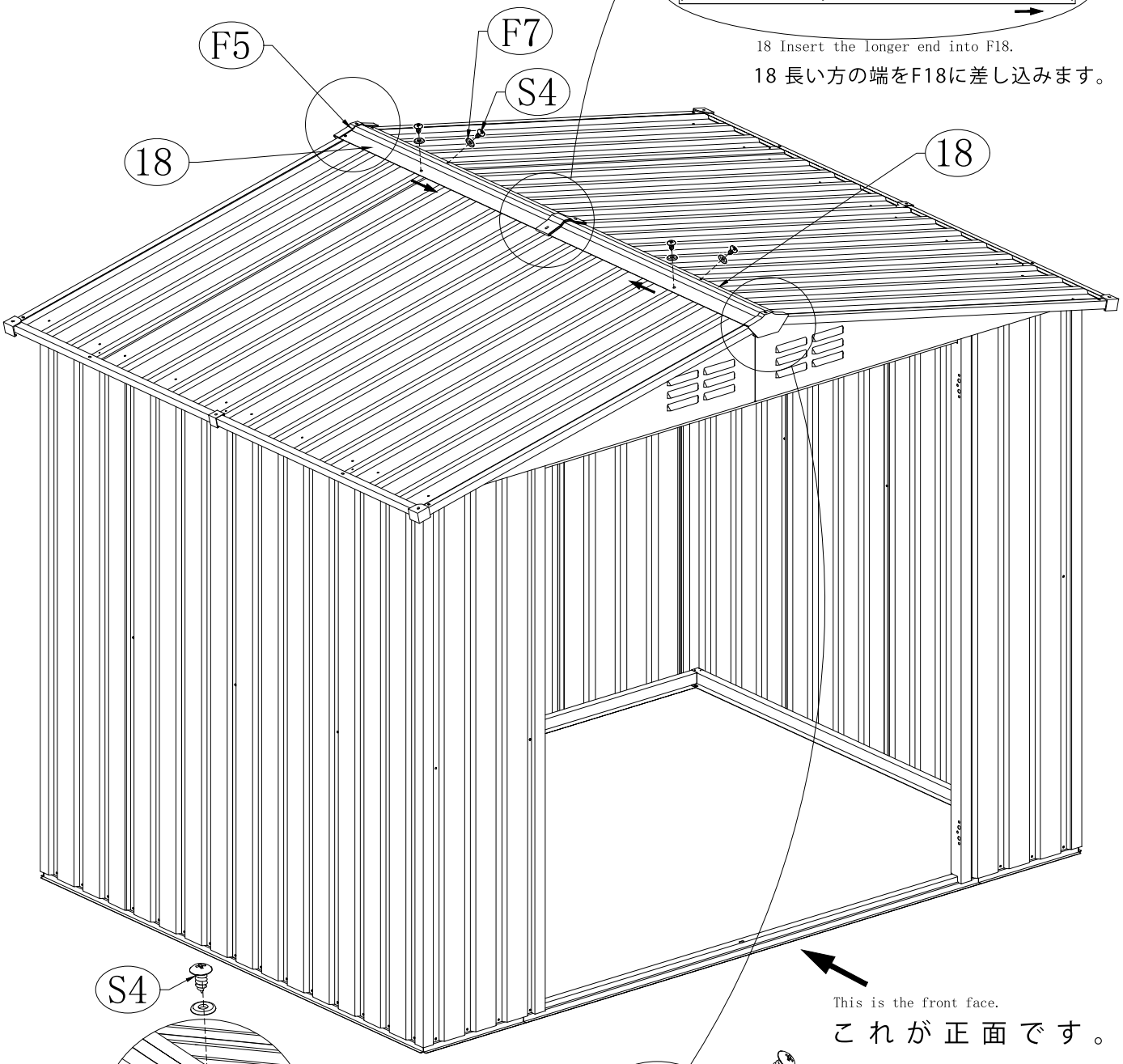

This is the front face.

これが正面です。

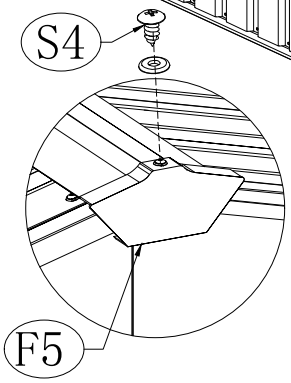

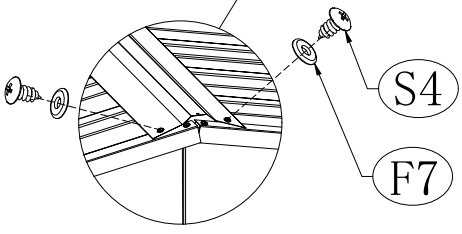

NO.	PART.	Qty.
15		2
16		1
22		1
M1		1
S6		3
S6A		3
S7		6
S1		1

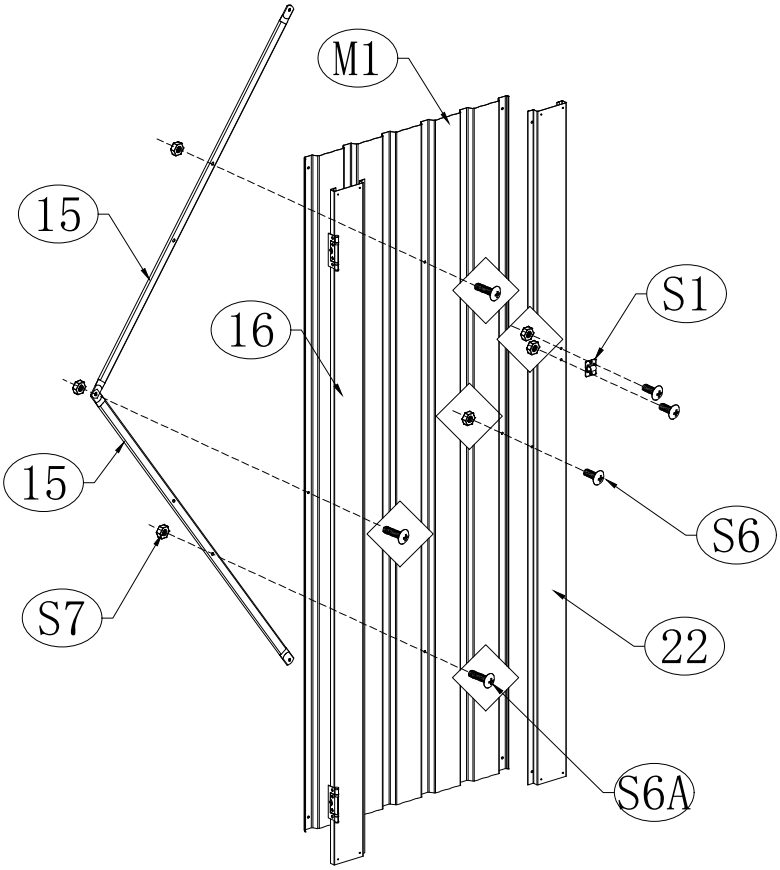

タイルの中央にある穴から遠い側に16を、近い側に22を配置してください。

Put 16 on the side farther from the hole in the center of the tile and 22 on the side nearer.

NO.	PART.	Qty.
21	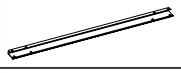	2
S4		8

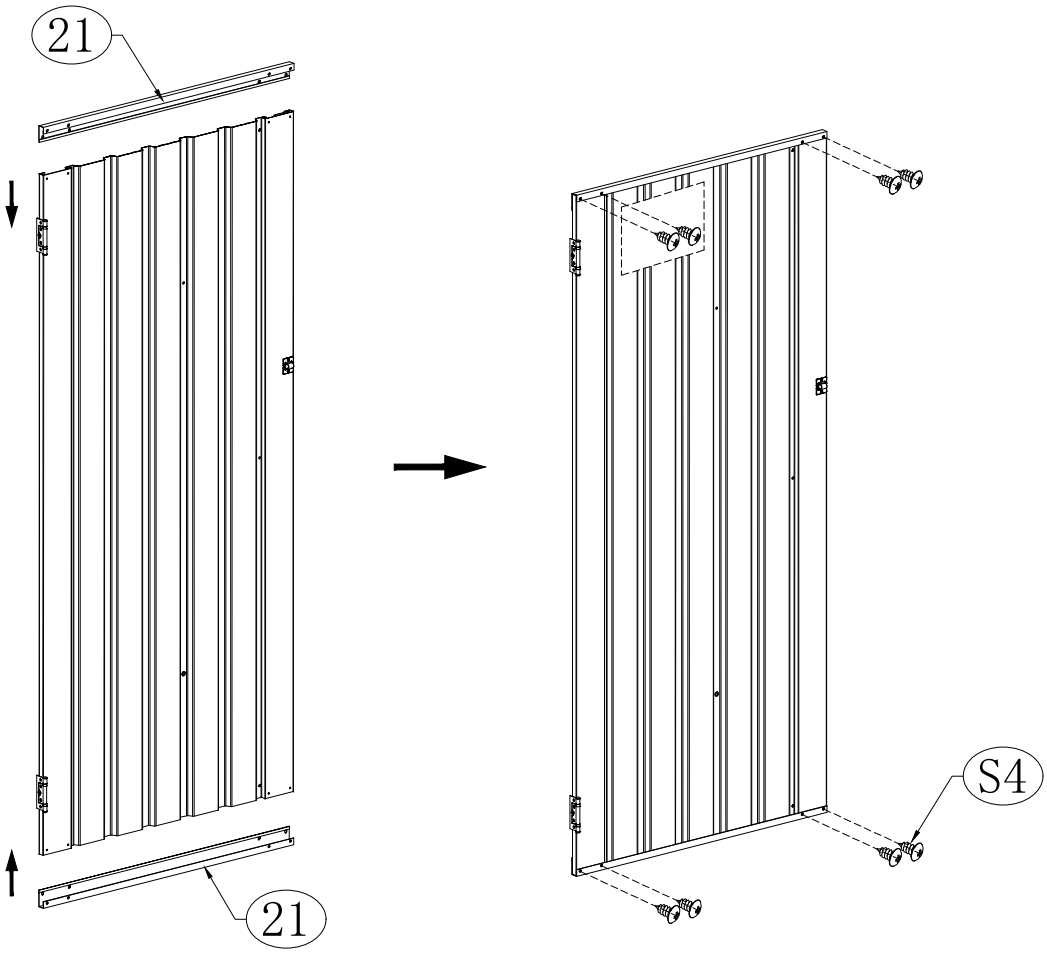

NO.	PART.	Qty.
S4		2
S5L	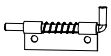	1
S5R	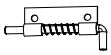	1
S6		6
S6A		2
S7		8

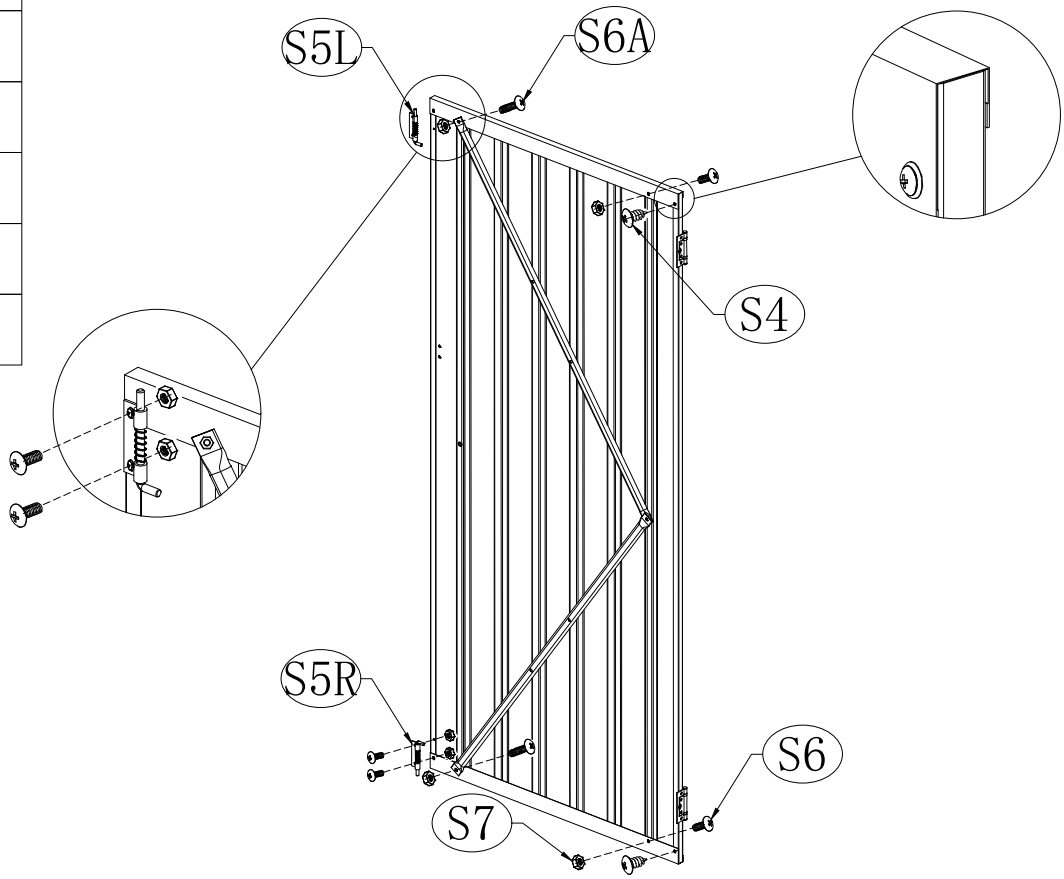

NO.	PART.	Qty.
15		2
16		1
23		1
M1	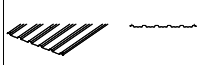	1
S2		1
S3		1
S6		7
S6A		3
S7		4

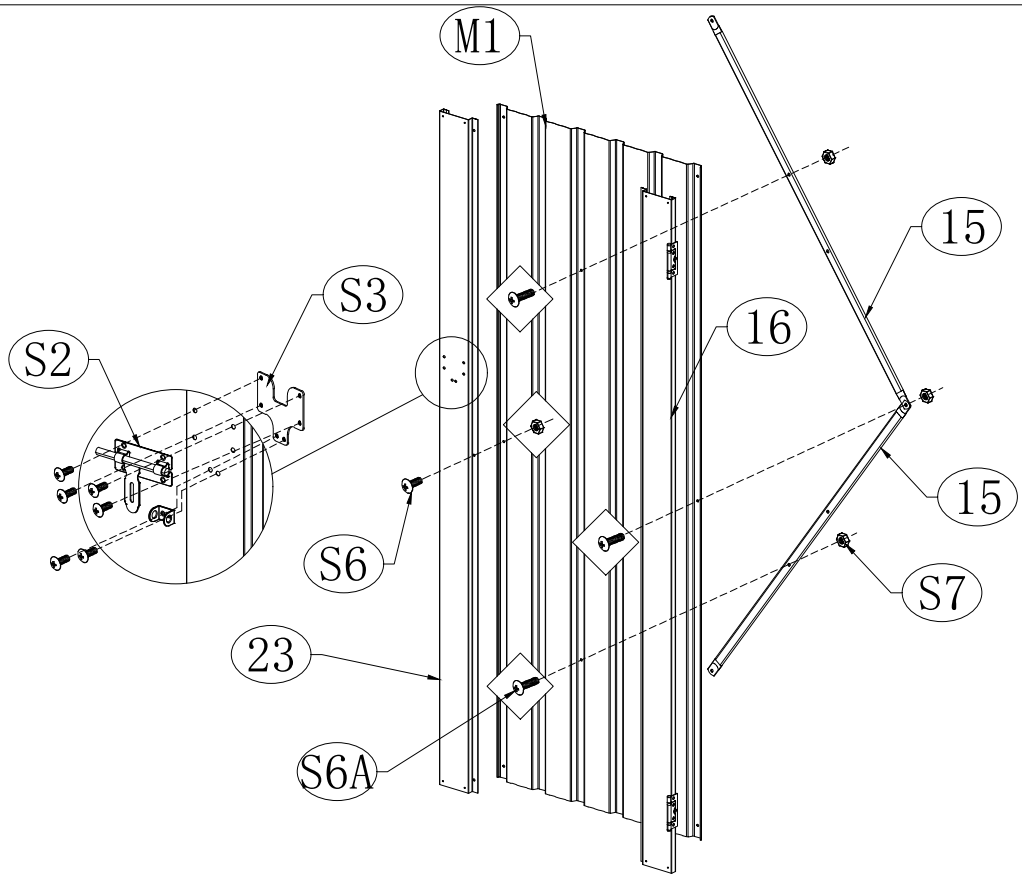

タイルの中央にある穴から遠い側に16を、近い側に23を配置してください。

Put 16 on the side farther from the hole in the center of the tile and 23 on the side nearer.

NO.	PART.	Qty.
21	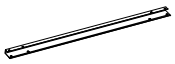	2
S4		8

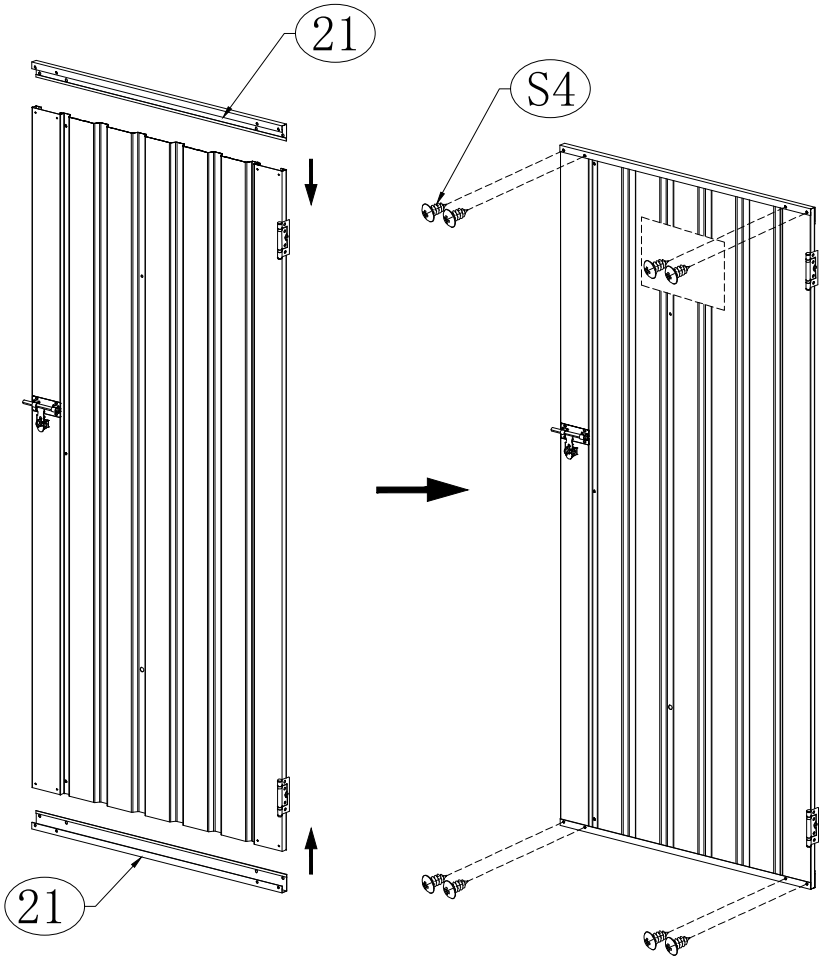

NO.	PART.	Qty.
S4		4
S6		2
S6A		2
S7		4

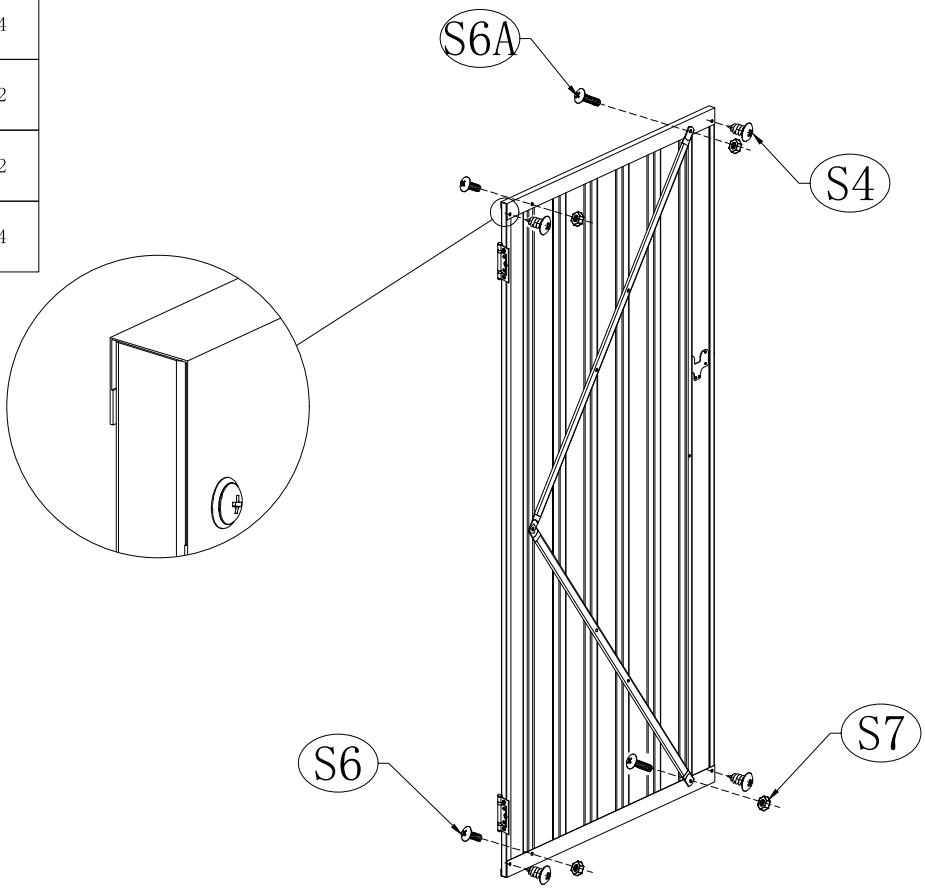

NO.	PART.	Qty.
S9		4
S6		12
S7		12

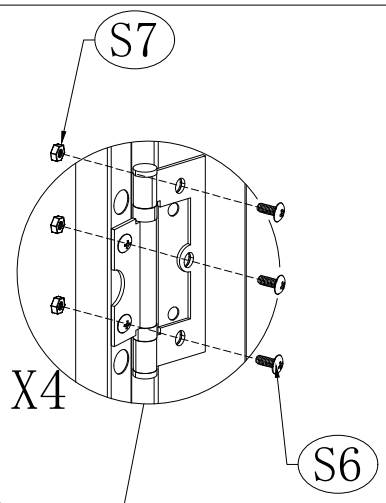

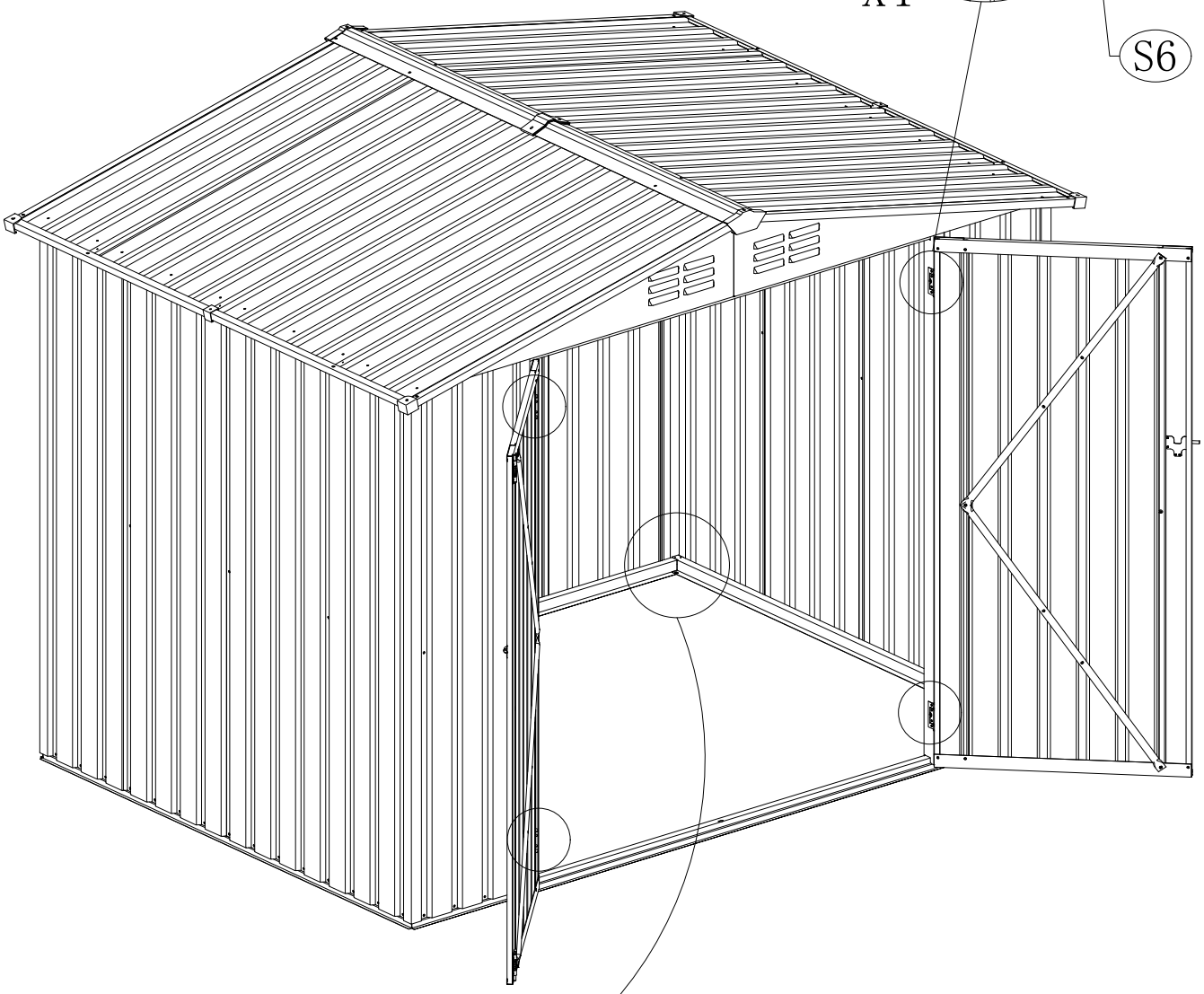

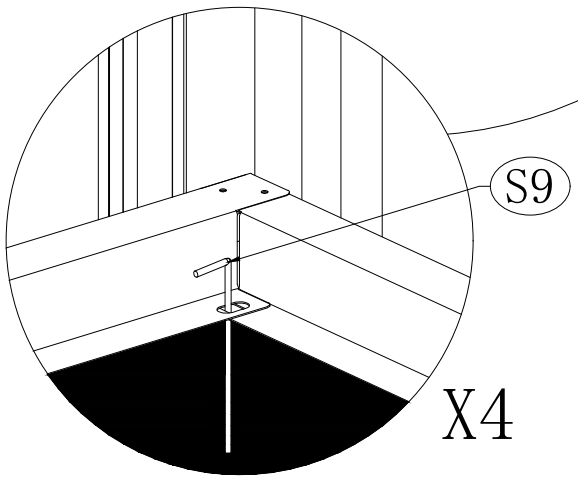

If the shed is installed on grass, the[S9]can be used to increase the stability of the shed.

小屋を芝生の上に設置する場合、[S9]を使用することで小屋の安定性を高めることができます。