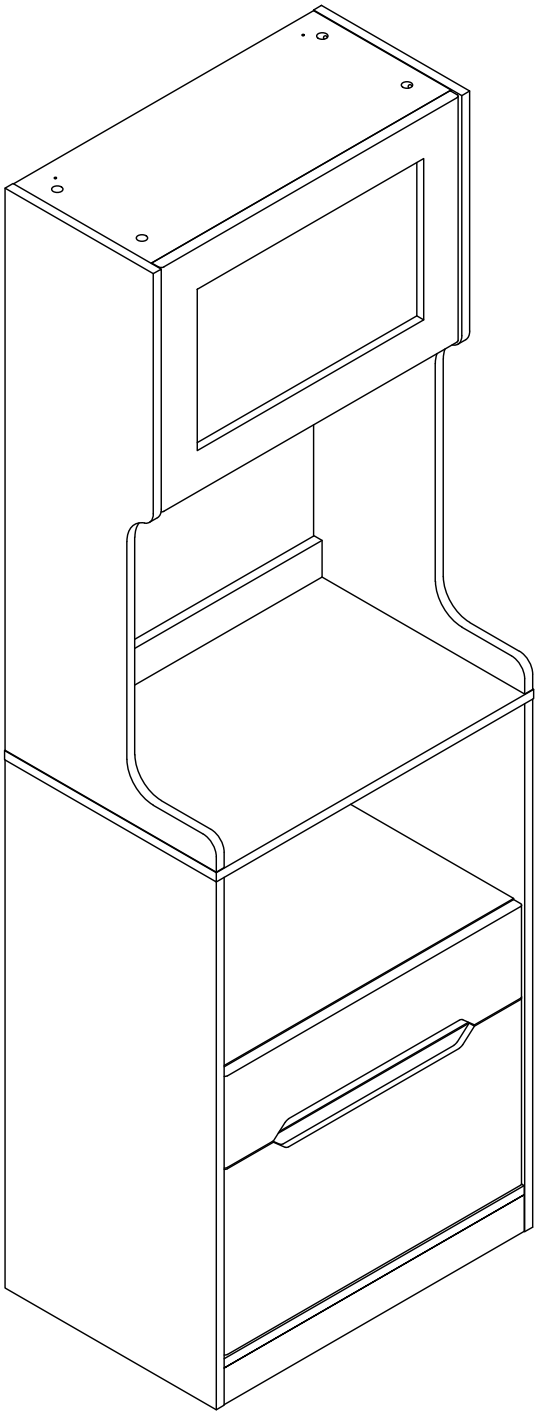

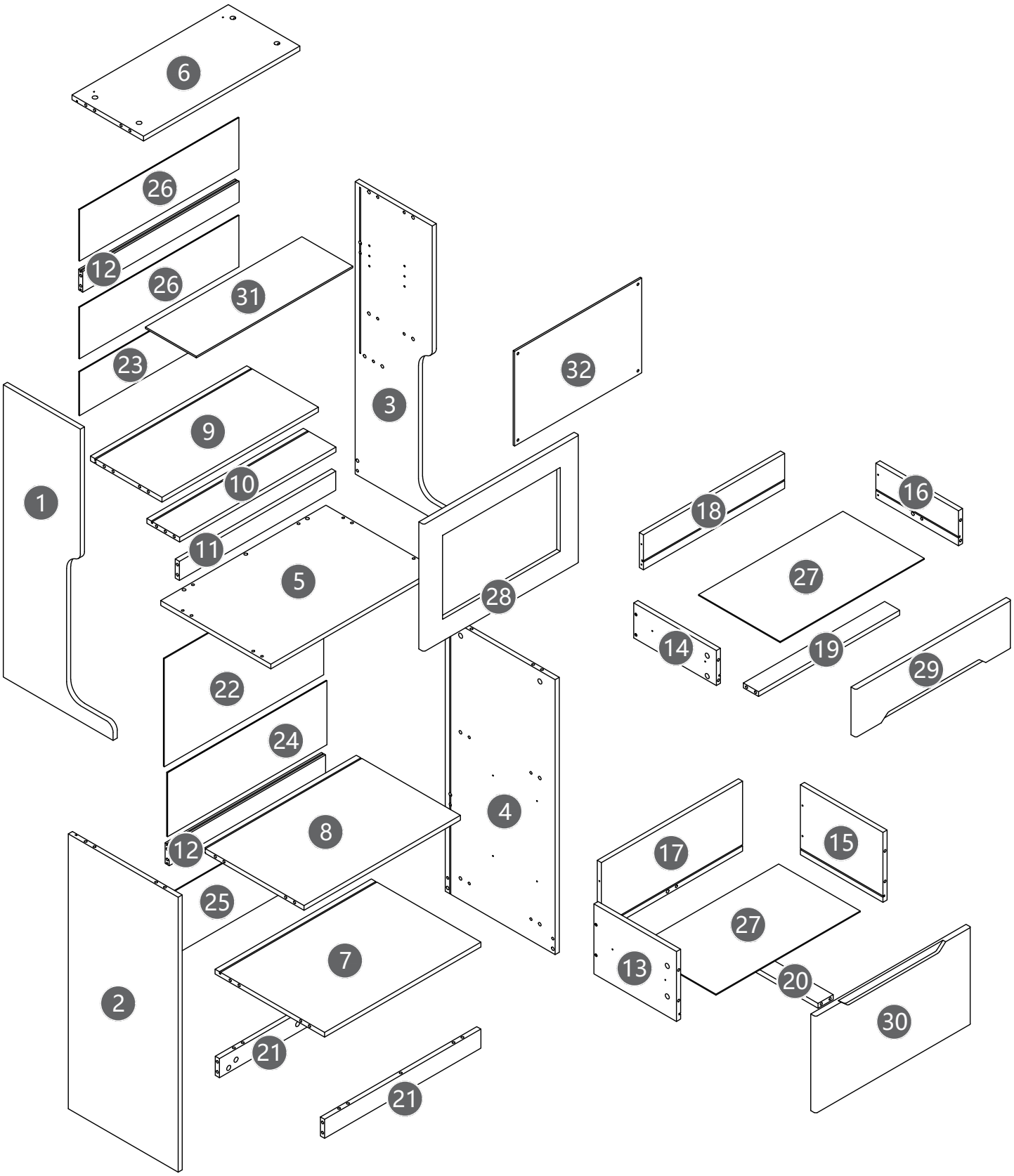
6
26
12
26
31
23
9
10
11
5
1
3
32
28
22
24
12
8
4
25
7
2
21
21
18
16
27
14
19
29
17
15
27
13
20
30

1 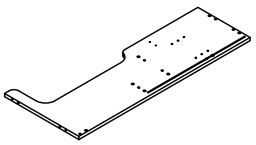 920*399(mm) 36.2*15.7(inch) 1PC	2 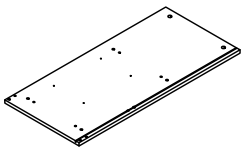 865*399(mm) 34.05*15.7(inch) 1PC	3 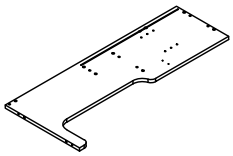 920*399(mm) 36.2*15.7(inch) 1PC	4 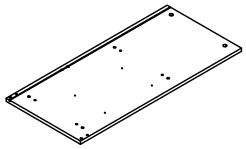 865*399(mm) 34.05*15.7(inch) 1PC	5 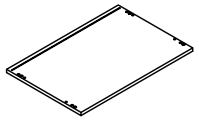 600*400(mm) 23.62*15.74(inch) 1PC
6 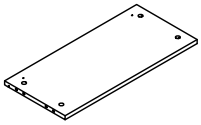 568*260(mm) 22.36*10.23(inch) 1PC	7 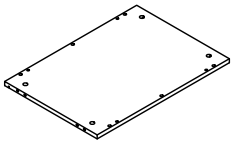 568*398(mm) 22.36*15.67(inch) 1PC	8 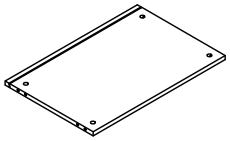 568*378(mm) 22.36*14.88(inch) 1PC	9 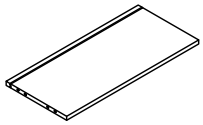 568*260(mm) 22.36*10.23(inch) 1PC	10 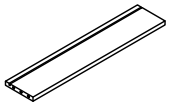 568*119(mm) 22.36*4.66(inch) 1PC
11 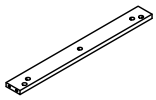 568*60(mm) 22.36*2.36(inch) 1PC	12  568*65(mm) 22.36*2.56(inch) 2PCS	13 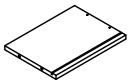 300*220(mm) 11.81*8.66(inch) 1PC	14 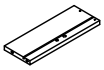 300*110(mm) 11.81*4.33(inch) 1PC	15 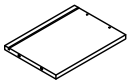 300*220(mm) 11.81*8.66(inch) 1PC
16 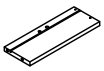 300*110(mm) 11.81*4.33(inch) 1PC	17 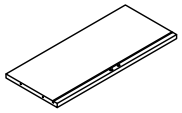 513*220(mm) 20.19*8.66(inch) 1PC	18 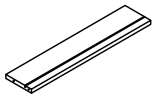 513*110(mm) 20.19*4.33(inch) 1PC	19 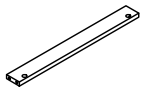 513*55(mm) 20.19*2.16(inch) 1PC	20  285*55(mm) 11.22*2.16(inch) 1PC
21 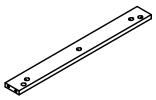 568*60(mm) 22.36*2.36(inch) 2PCS	22 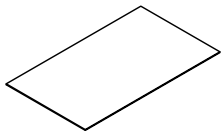 579*340(mm) 22.79*13.38(inch) 1PC	23 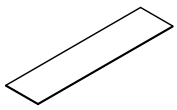 579*138(mm) 22.79*5.43(inch) 1PC	24 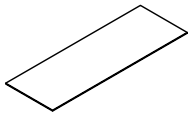 579*200(mm) 22.79*7.87(inch) 1PC	25 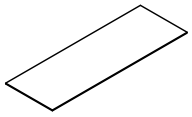 579*201(mm) 22.79*7.91(inch) 1PC
26 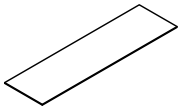 579*162(mm) 22.79*6.37(inch) 2PCS	27 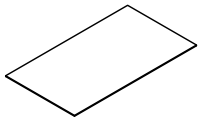 524*296(mm) 20.63*11.65(inch) 2PCS	28 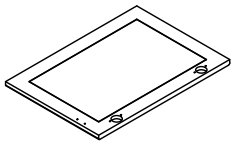 564*400(mm) 22.2*15.74(inch) 1PC	29 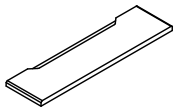 564*150(mm) 22.2*5.9(inch) 1PC	30 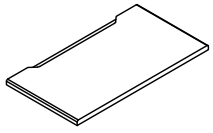 564*304(mm) 22.2*11.97(inch) 1PC
31 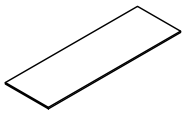 568*185(mm) 22.36*7.28(inch) 1PC	32 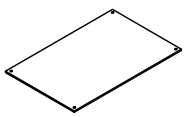 460*296(mm) 18.11*11.65(inch) 1PC			

A 55x 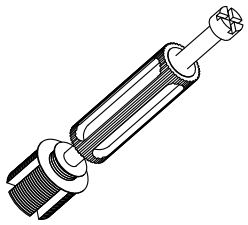	B 55x 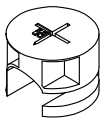	C 46x 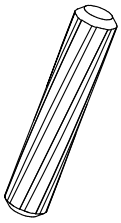 M8x40mm	D 34x 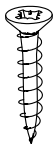 M3.5x14mm
E 4x 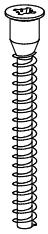 M7x50mm	F 2x 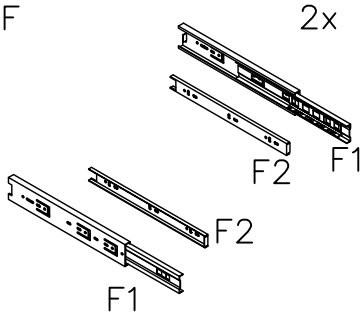	G 8x 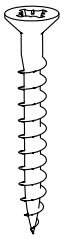 M3.5x35mm	H 4x 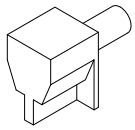
I 2x 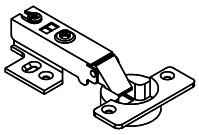	J 4x 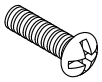 M6x12mm	K 1x 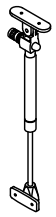	L 26x 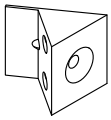
M 26x 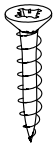 M3x12mm	N 2x 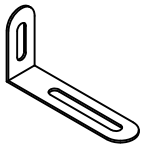	O 2x 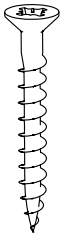 M4x50mm	P 2x 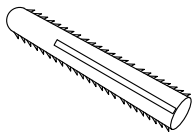
Q 12x 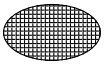			

Hardware installation demonstration

NOTE:Please make sure "A"hardware tightened and can't be pulled out!

I

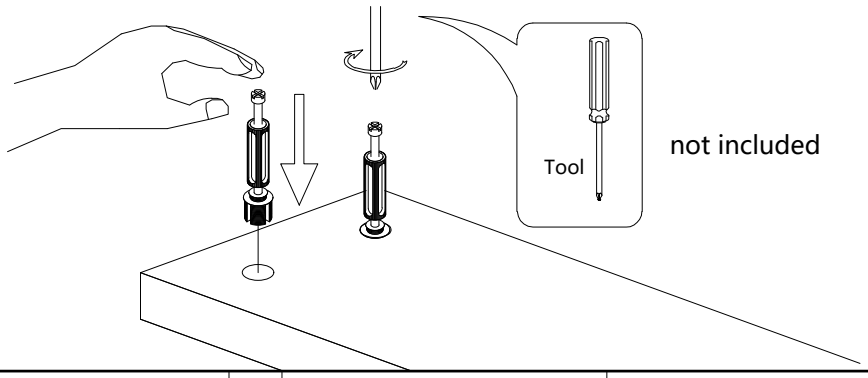

II

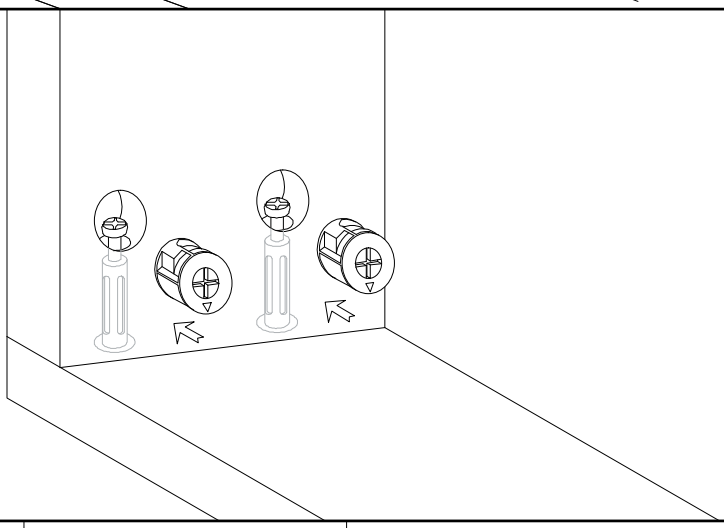

III

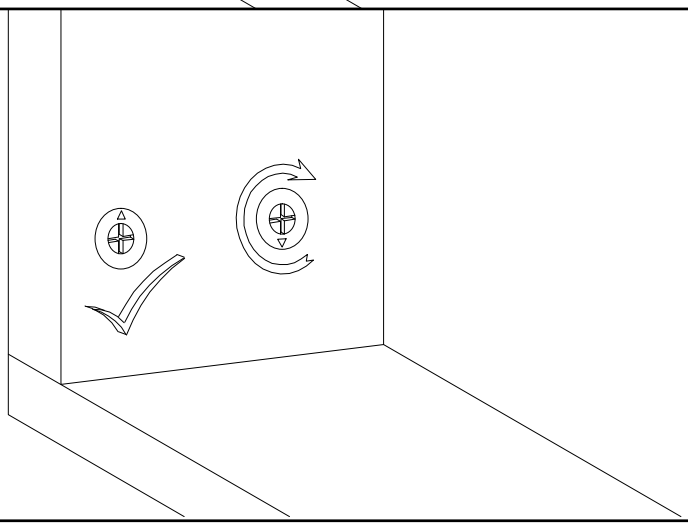

01

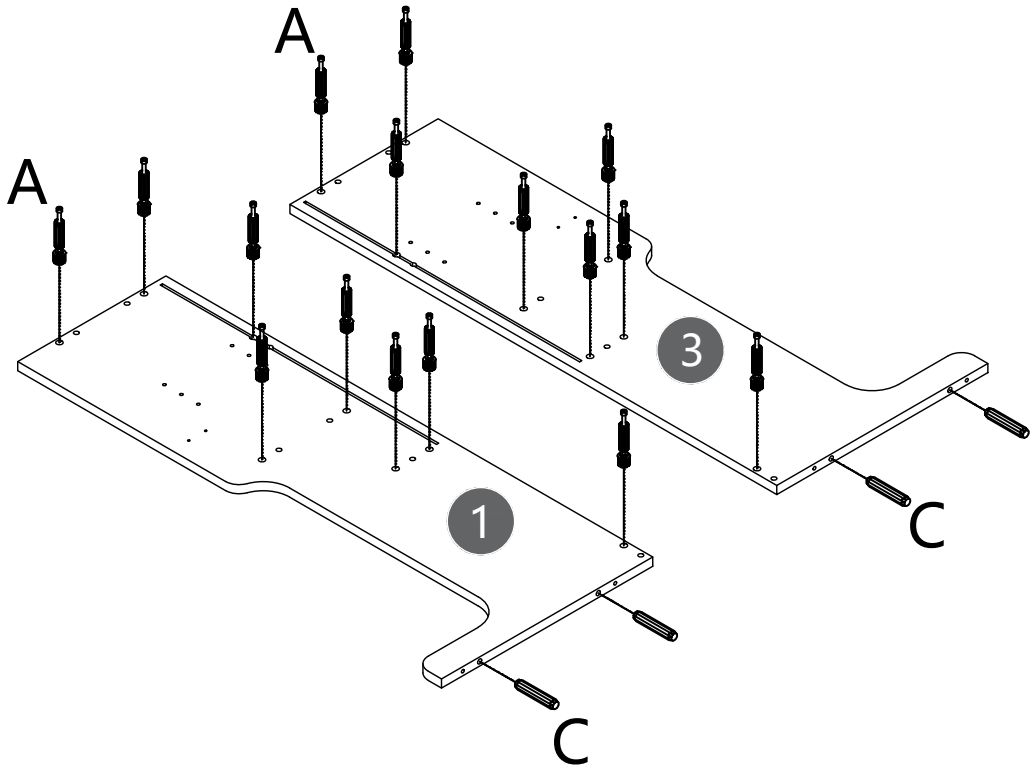

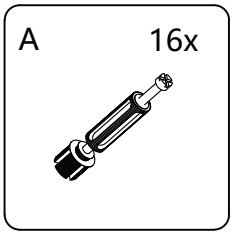

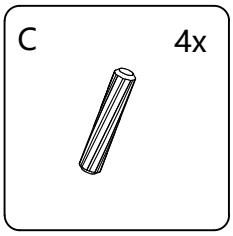

02

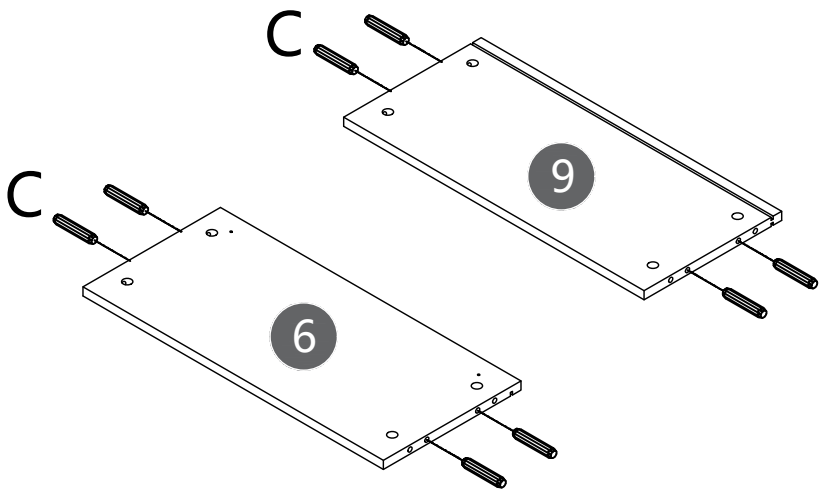

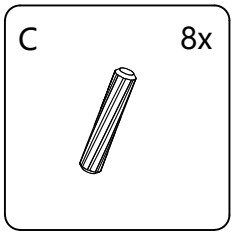

03

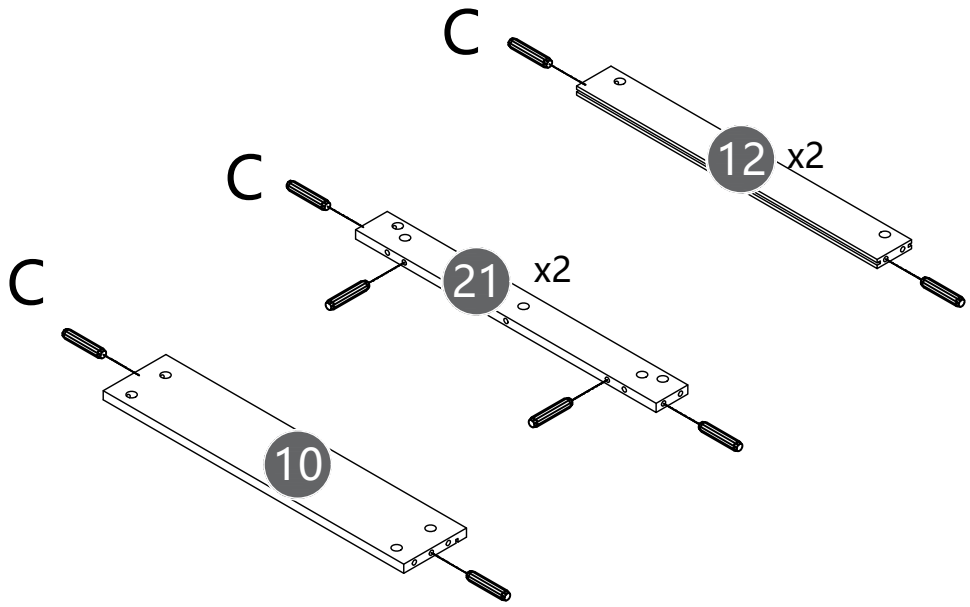

C 14x



04

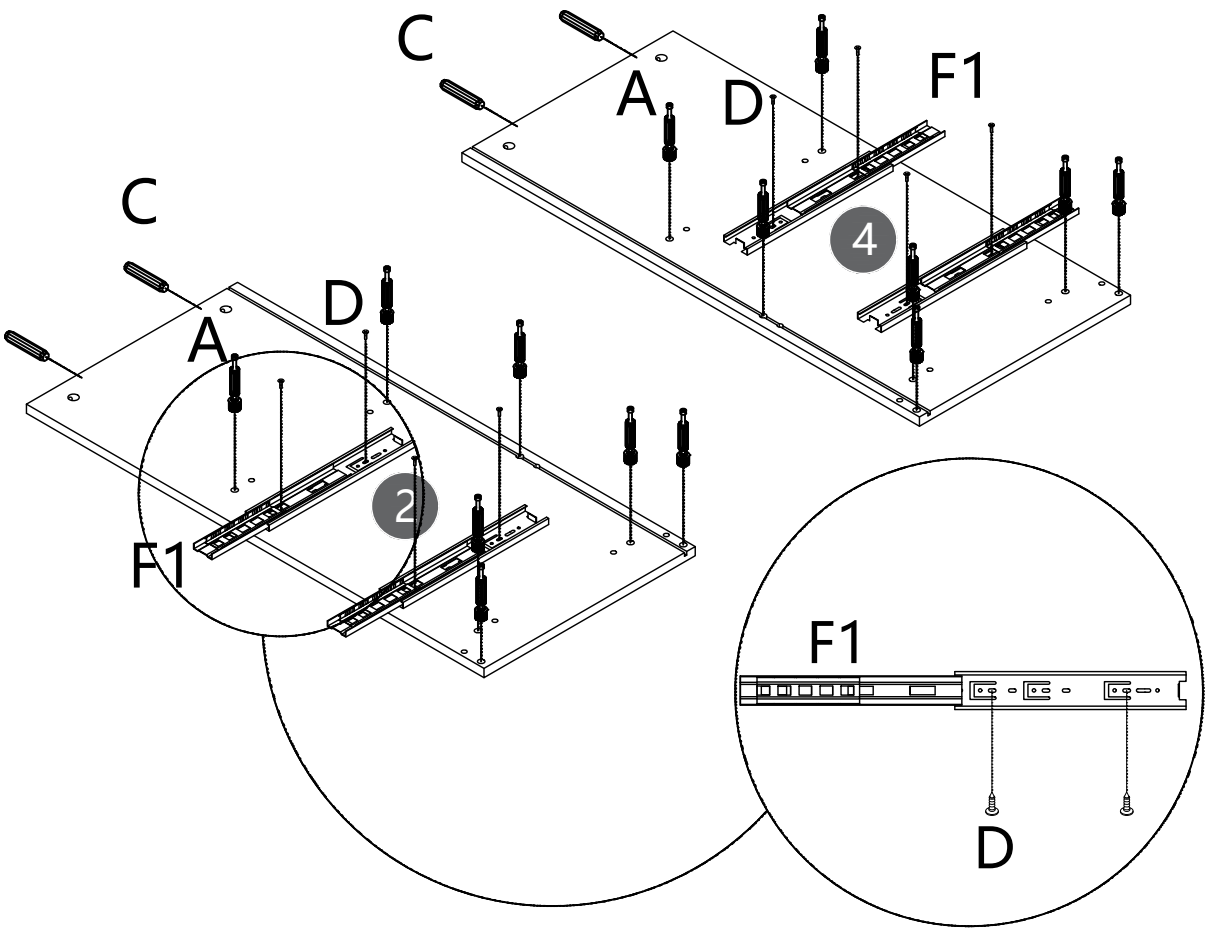

A 14x

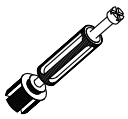

C 4x



D 8x

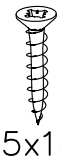

M3.5x14mm

F1 4x

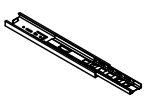

05

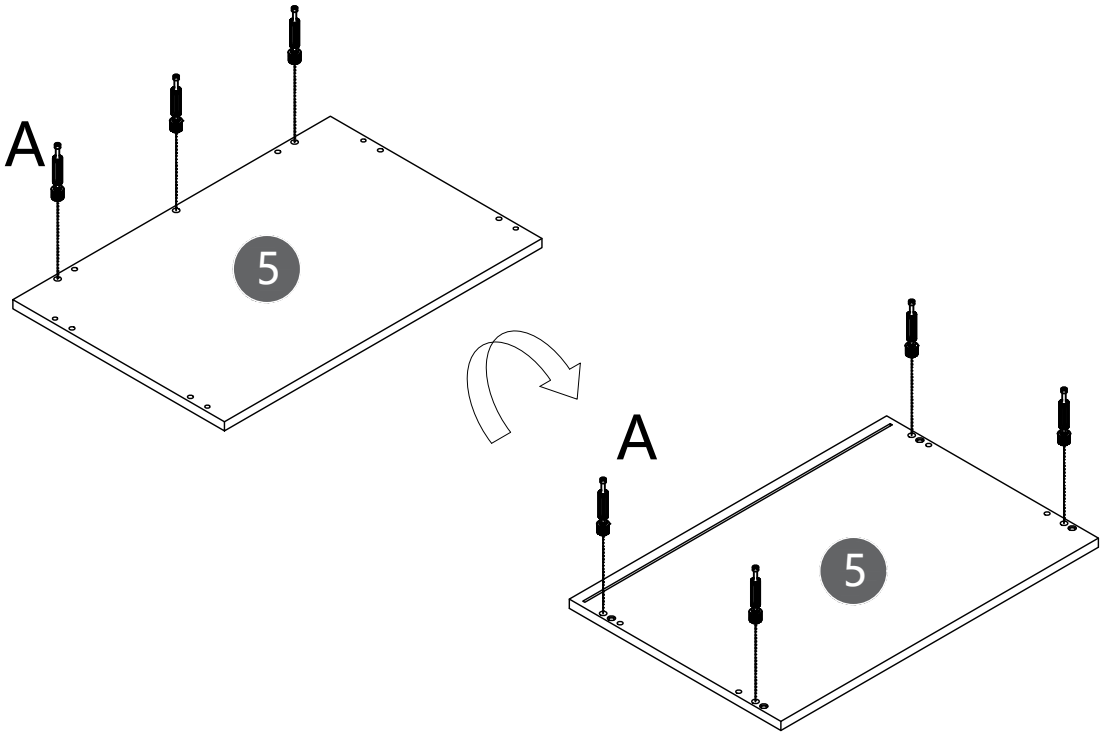

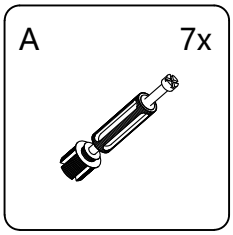

06

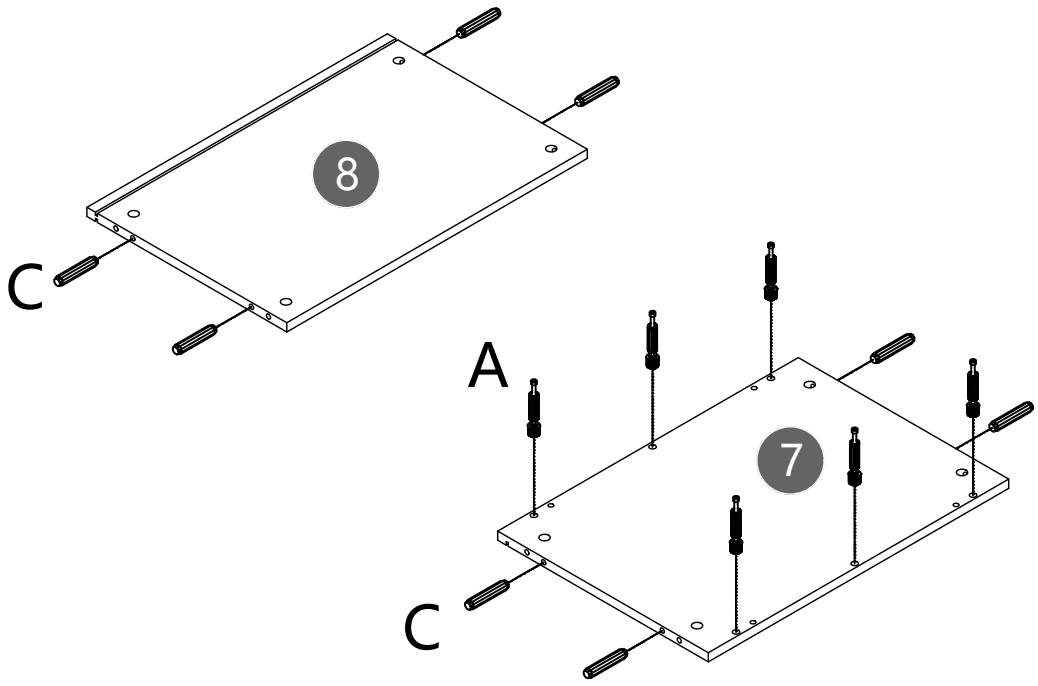

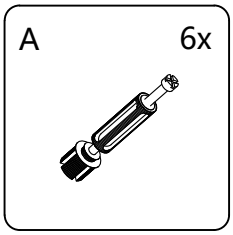

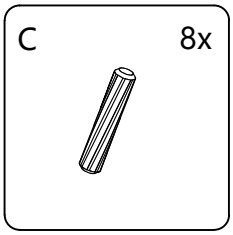

07

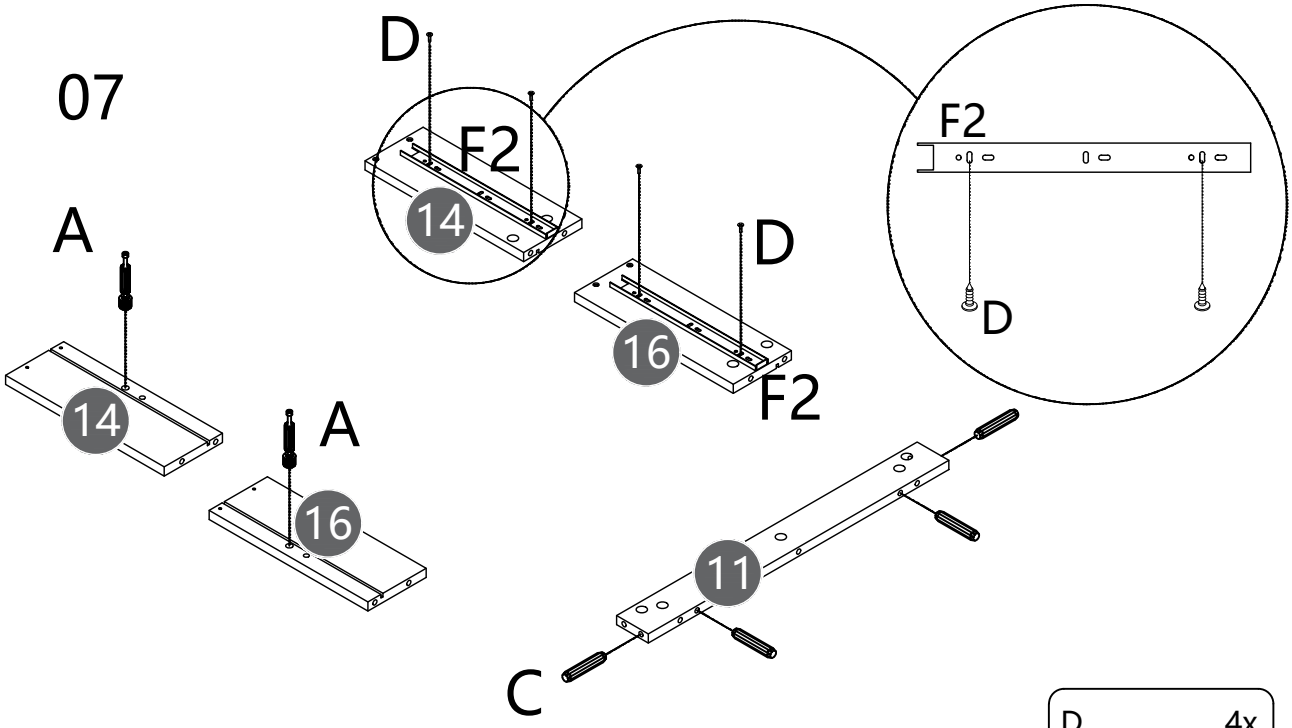

A 2x

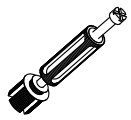

C 4x



D 4x

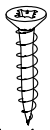

M3.5x14mm

F2 2x

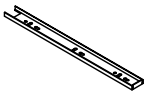

08

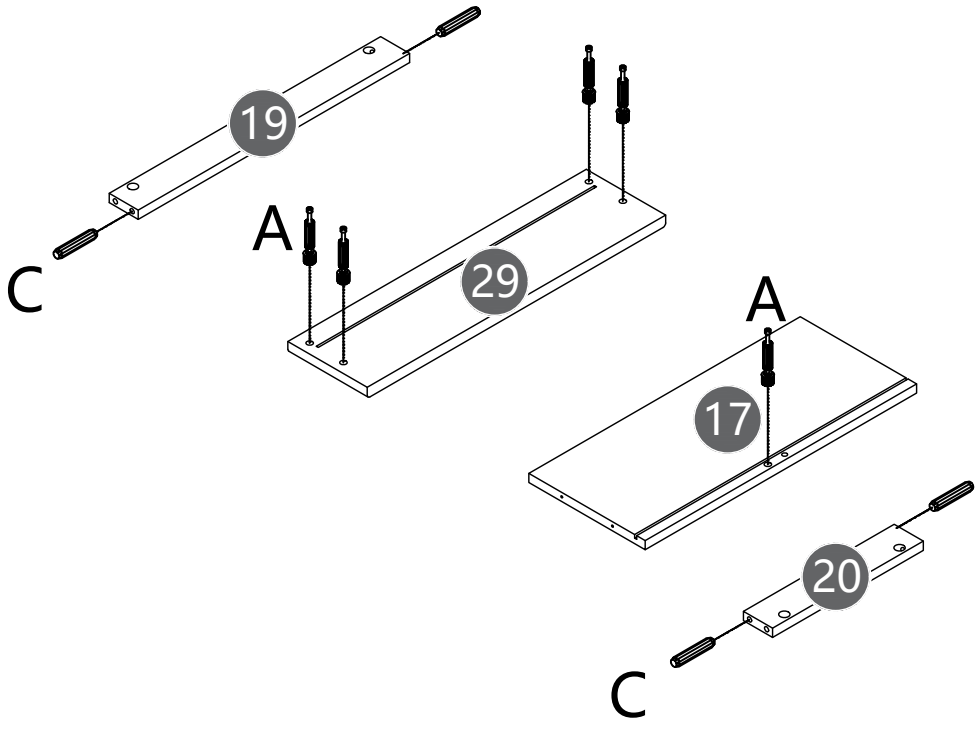

A 5x

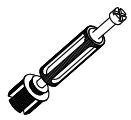

C 4x

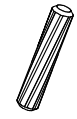

09

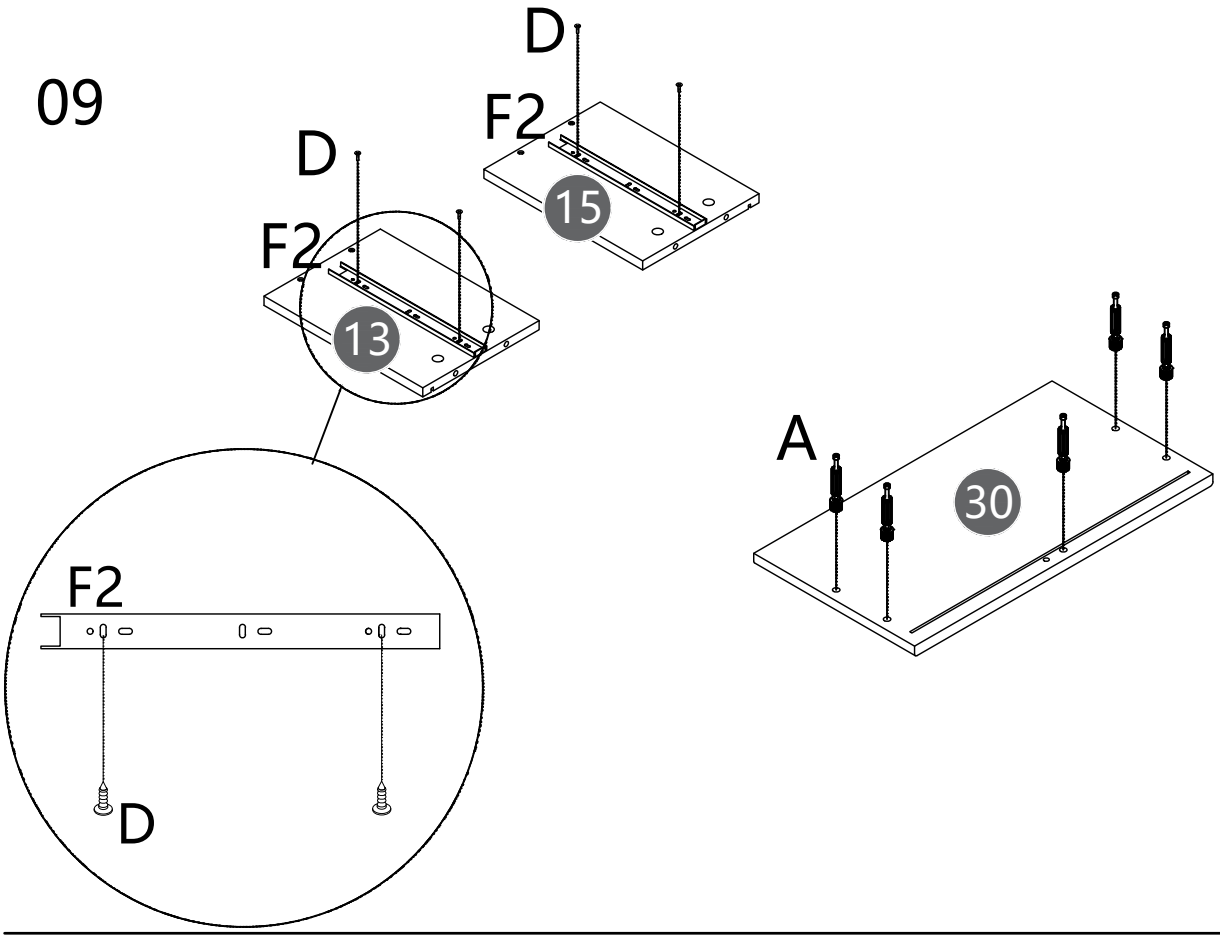

A 5x

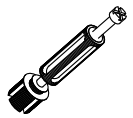

D 4x

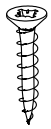

M3.5x14mm

F2 2x

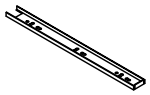

10

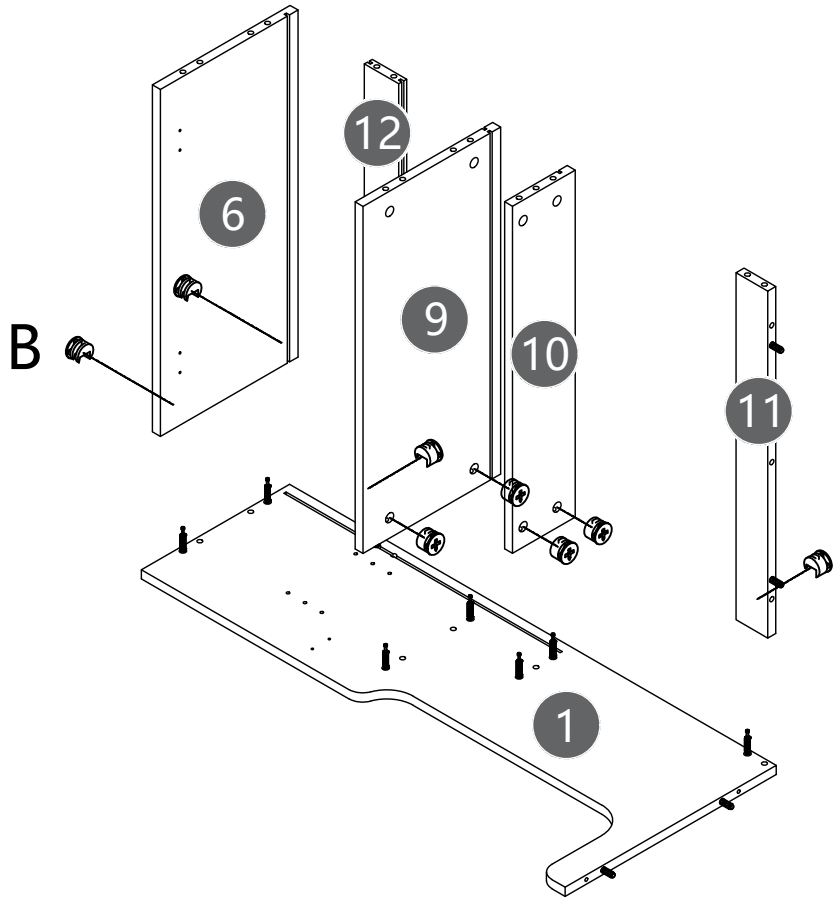

B 8x



11

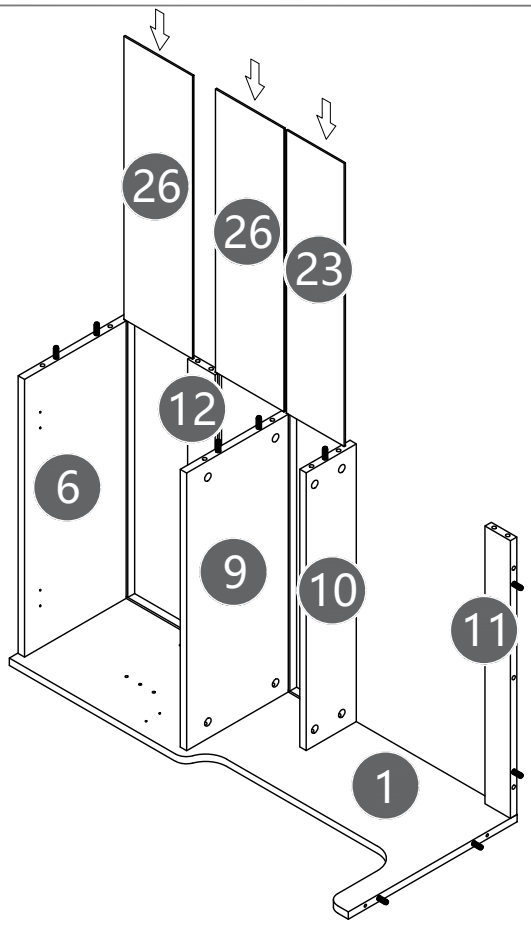

12

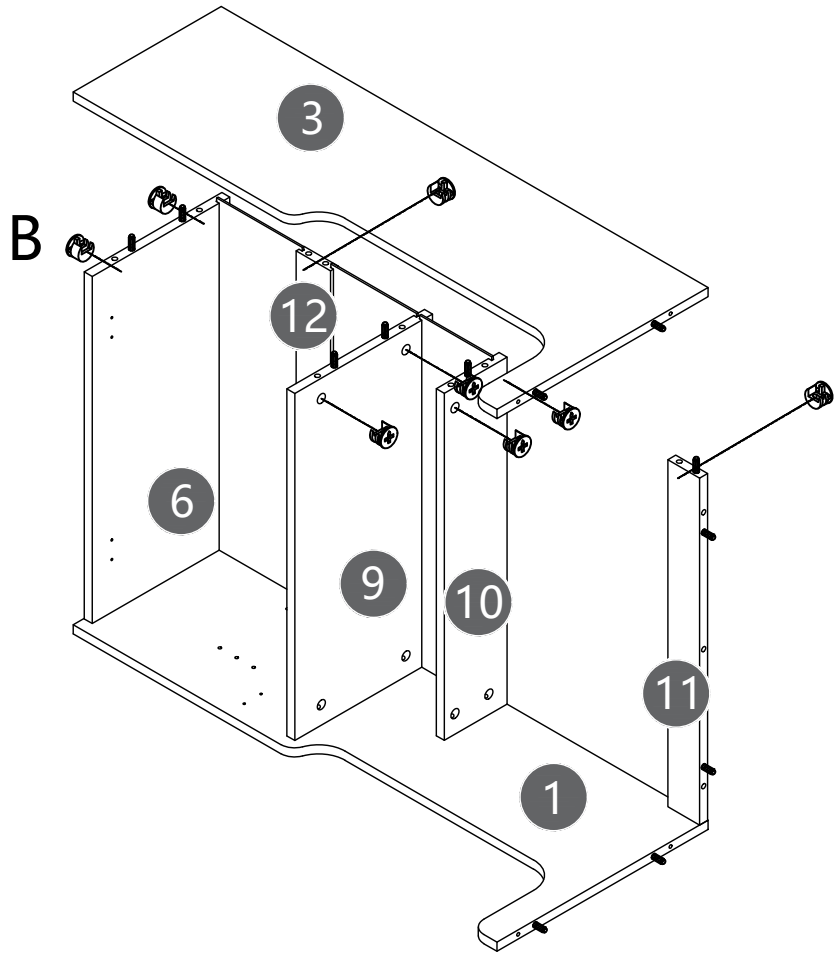

B	8x



13

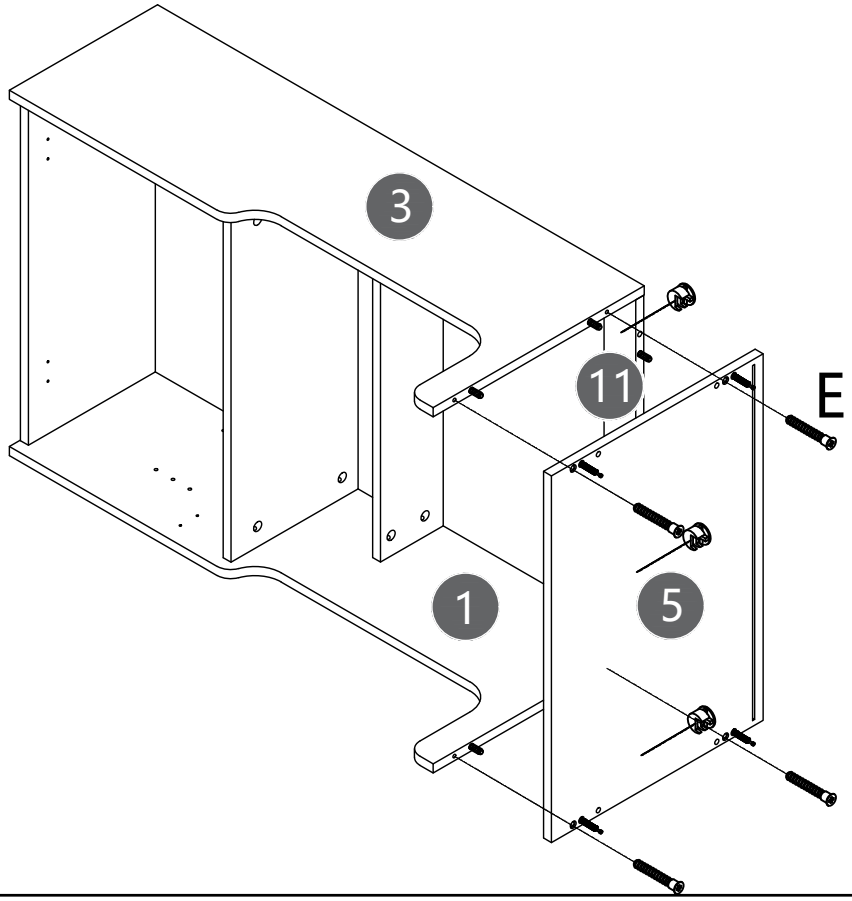

B 3x



E 4x



M7x50mm

14

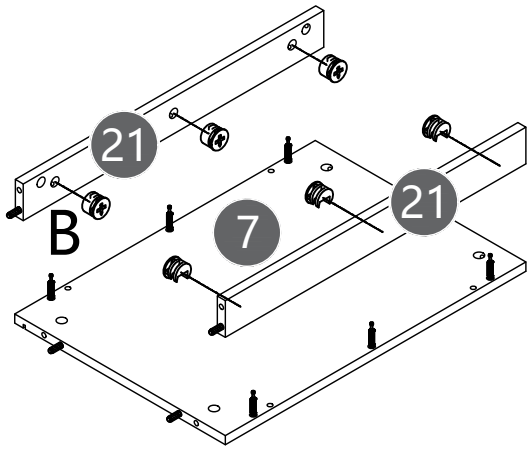

B 6x



15

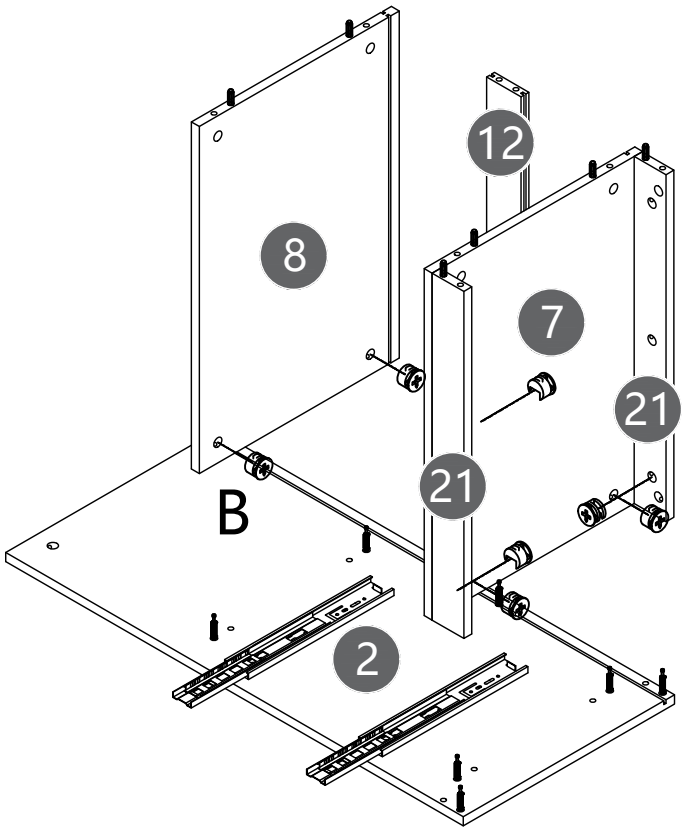

B 7x



16

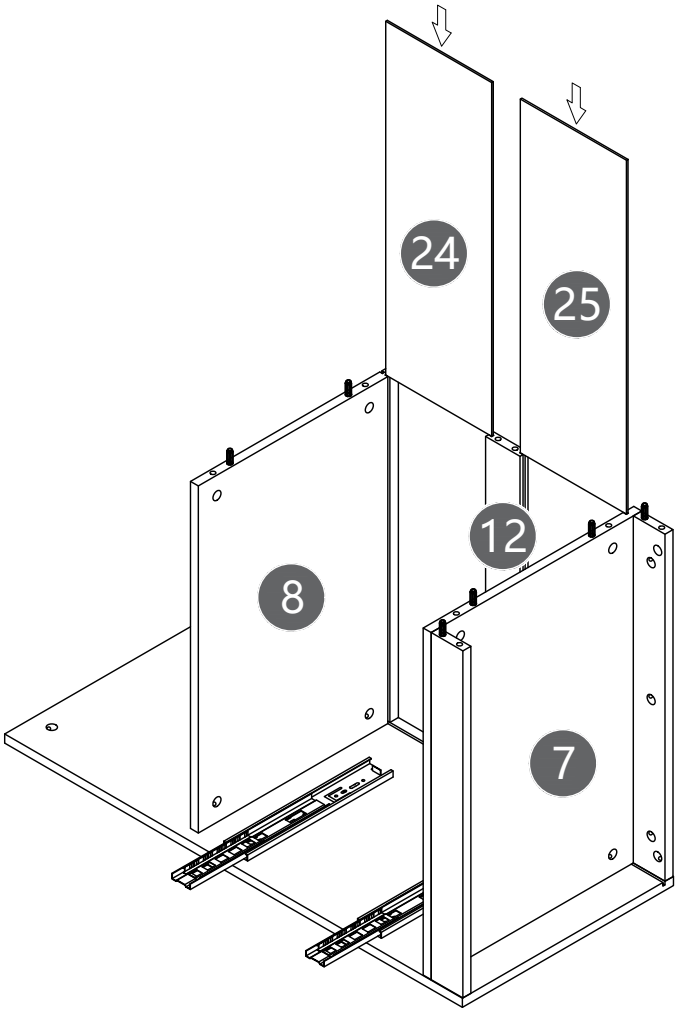

17

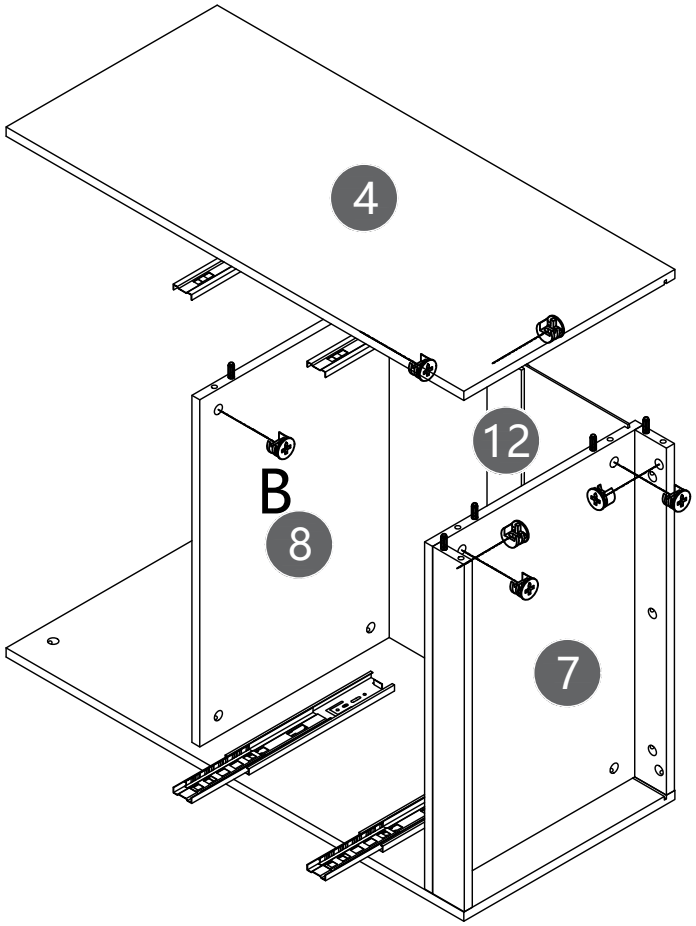

B 7x



18

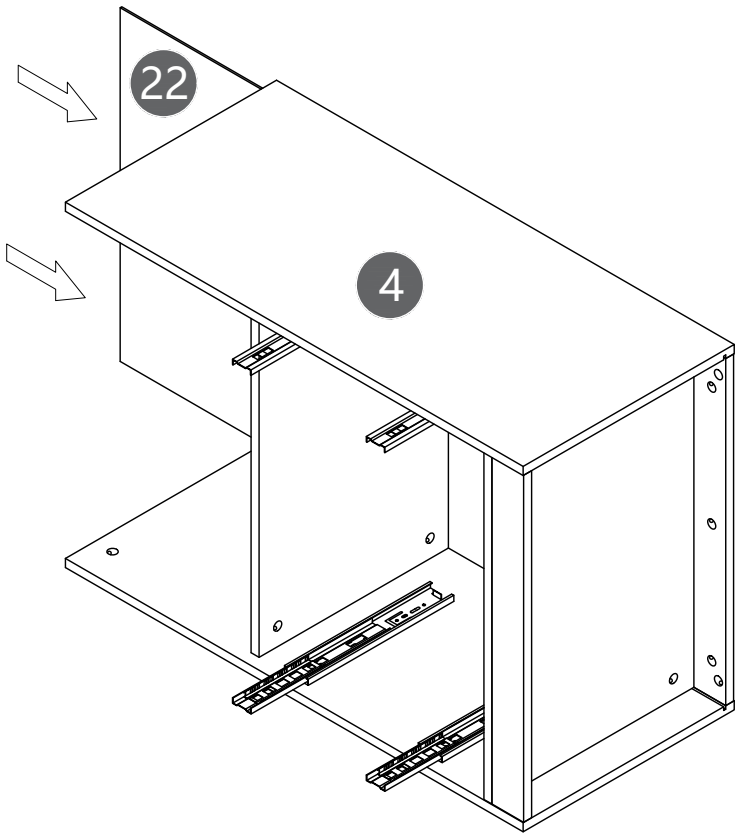

19

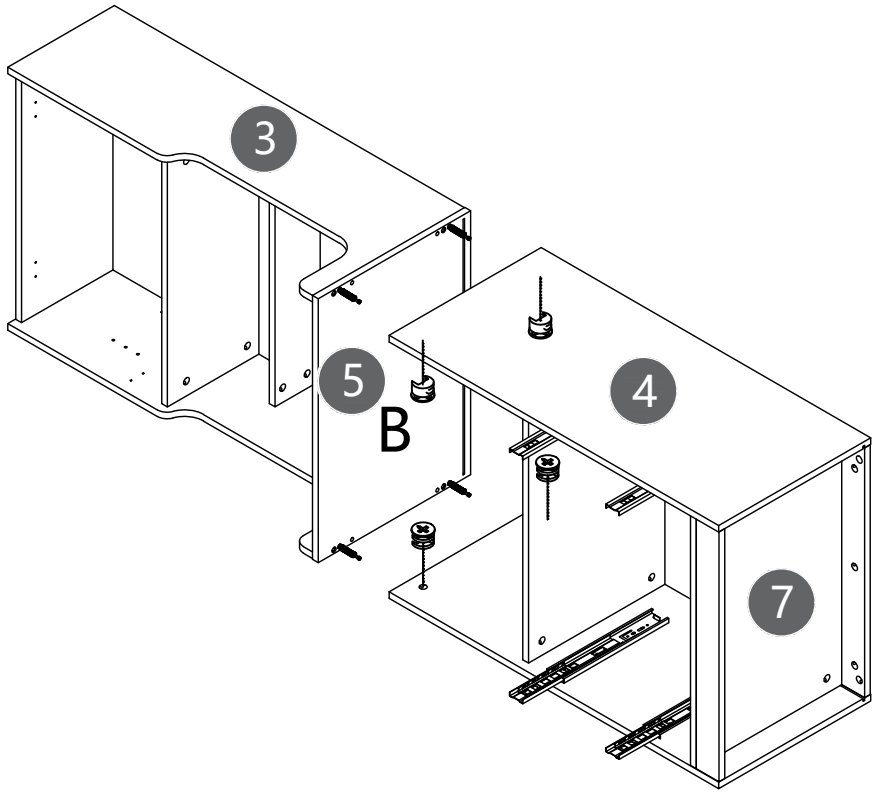

B 4x



20

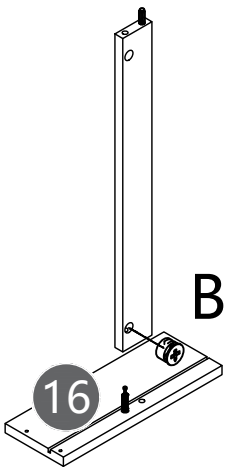

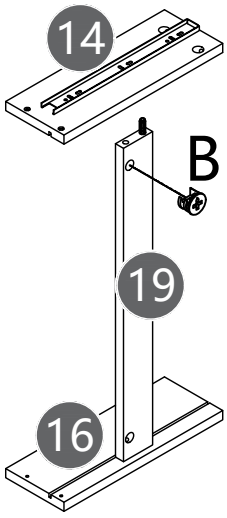

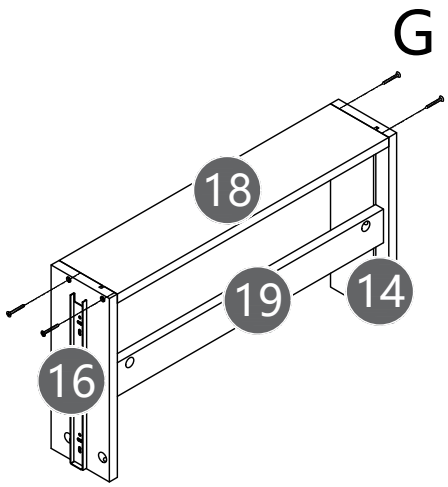

B 2x



G 4x

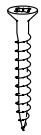

M3.5x35mm

21

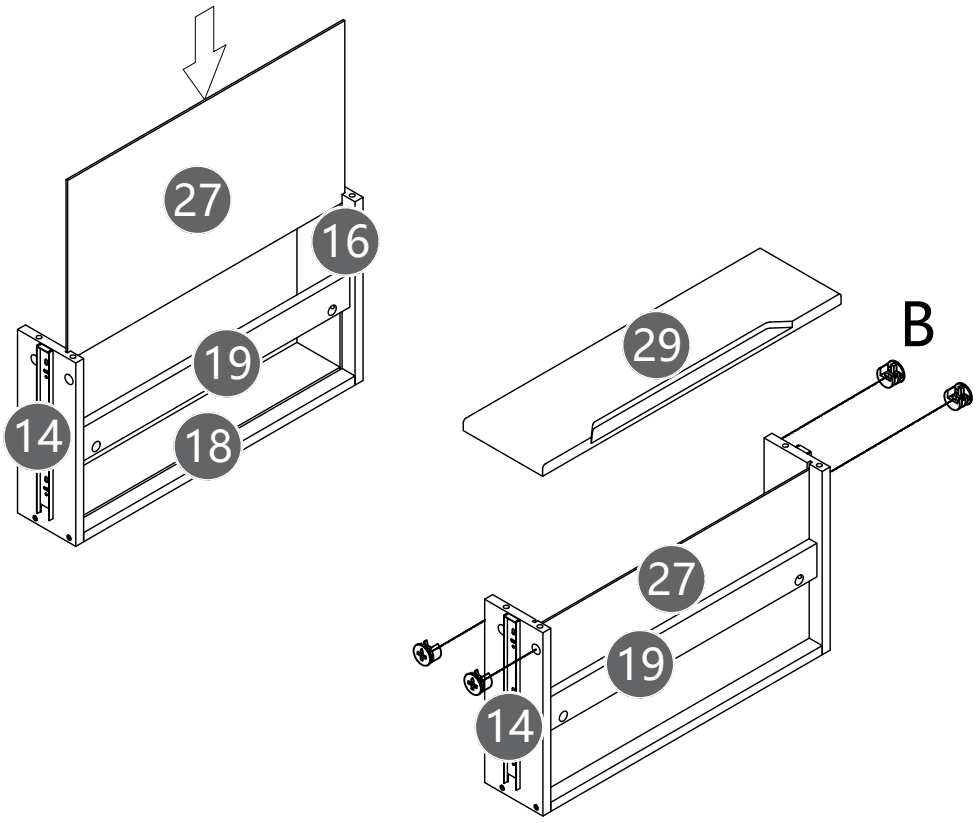
27
16
19
14
18
29
B
27
19
14

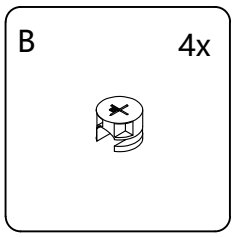
B
4x

22

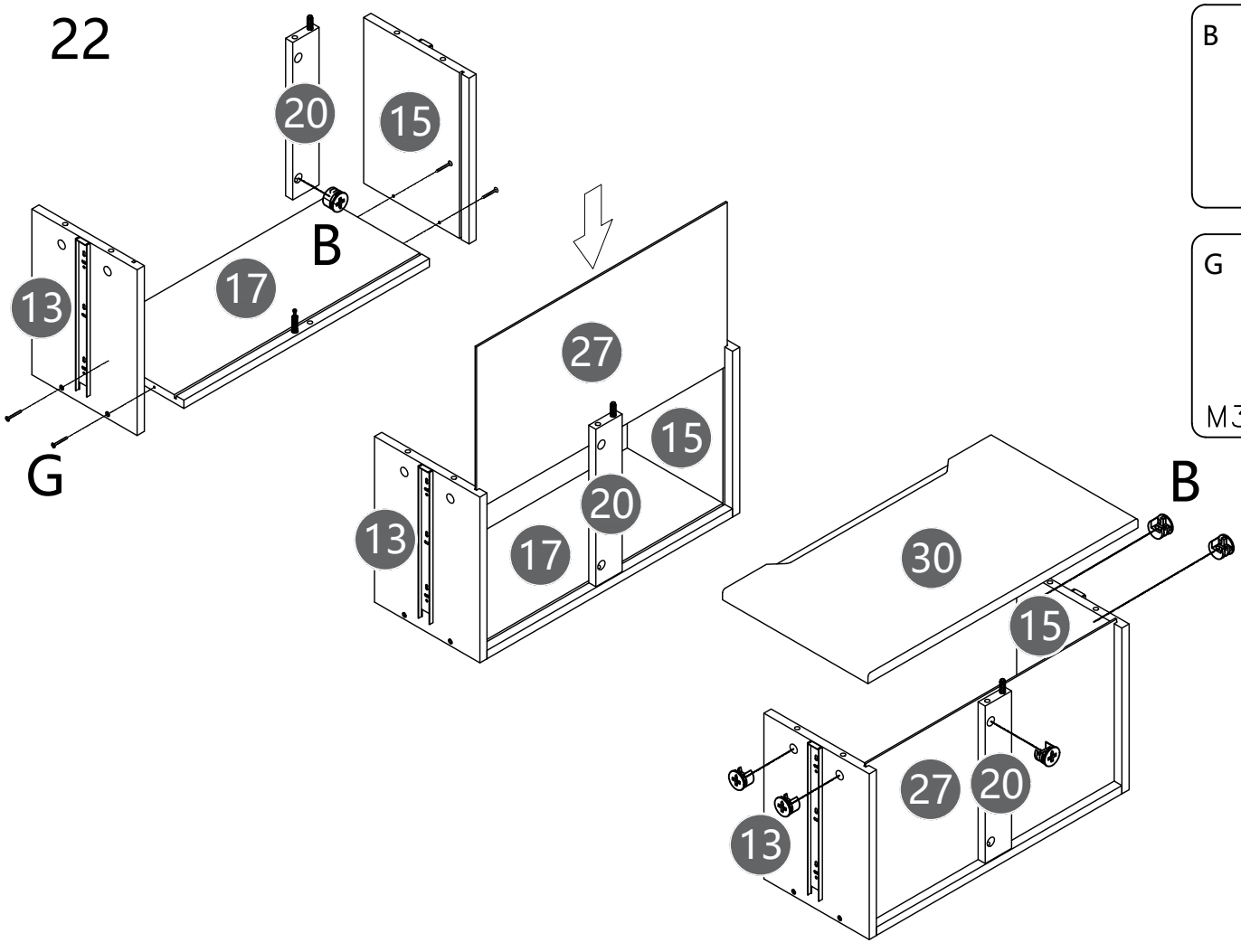
20
15
B
17
13
G
27
15
20
13
17
B
30
15
27
20
13

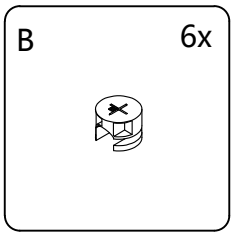
B
6x

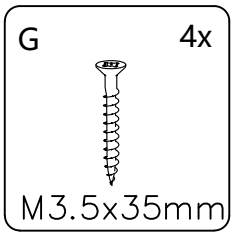
G
4x
M3.5x35mm

23

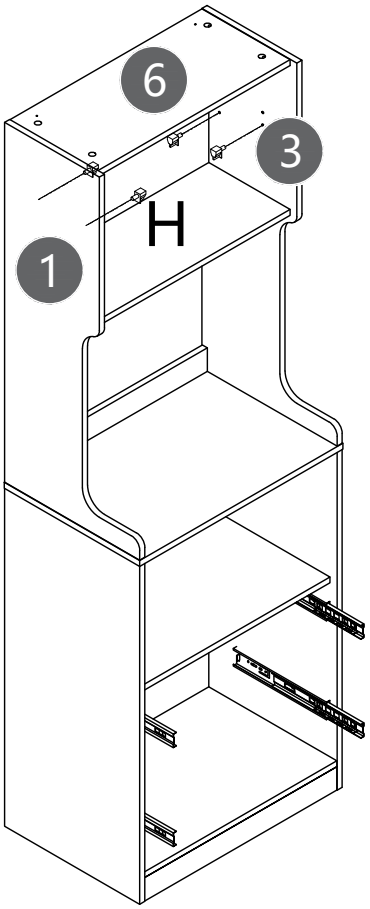

H 4x



24

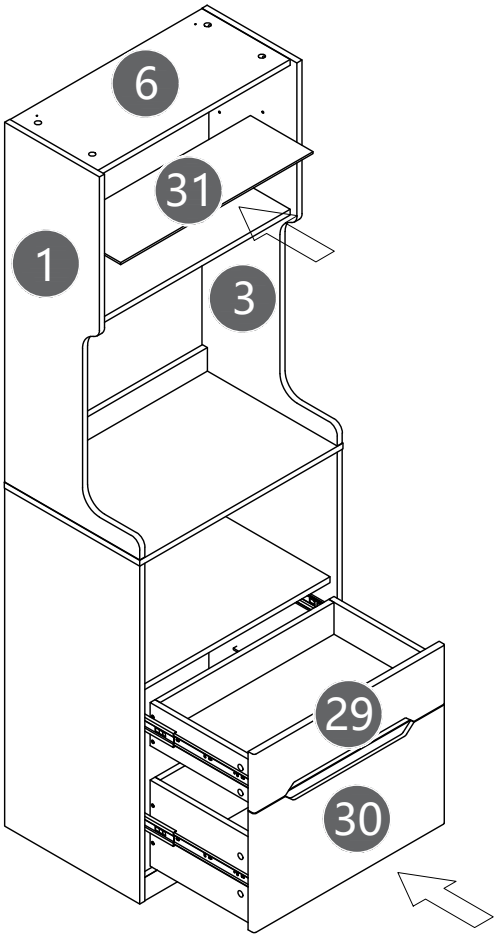

25

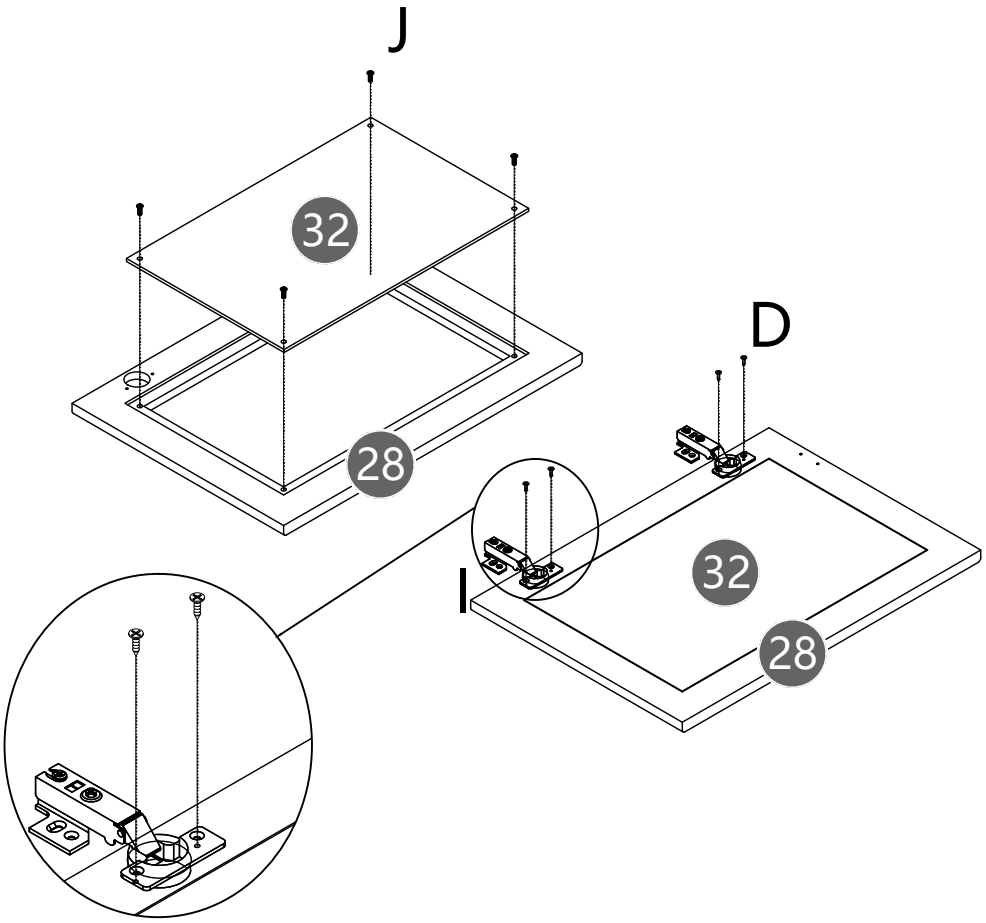

D 4x



M3.5x14mm

I 2x

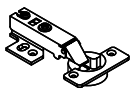

J 4x

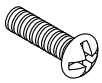

M6x12mm

26

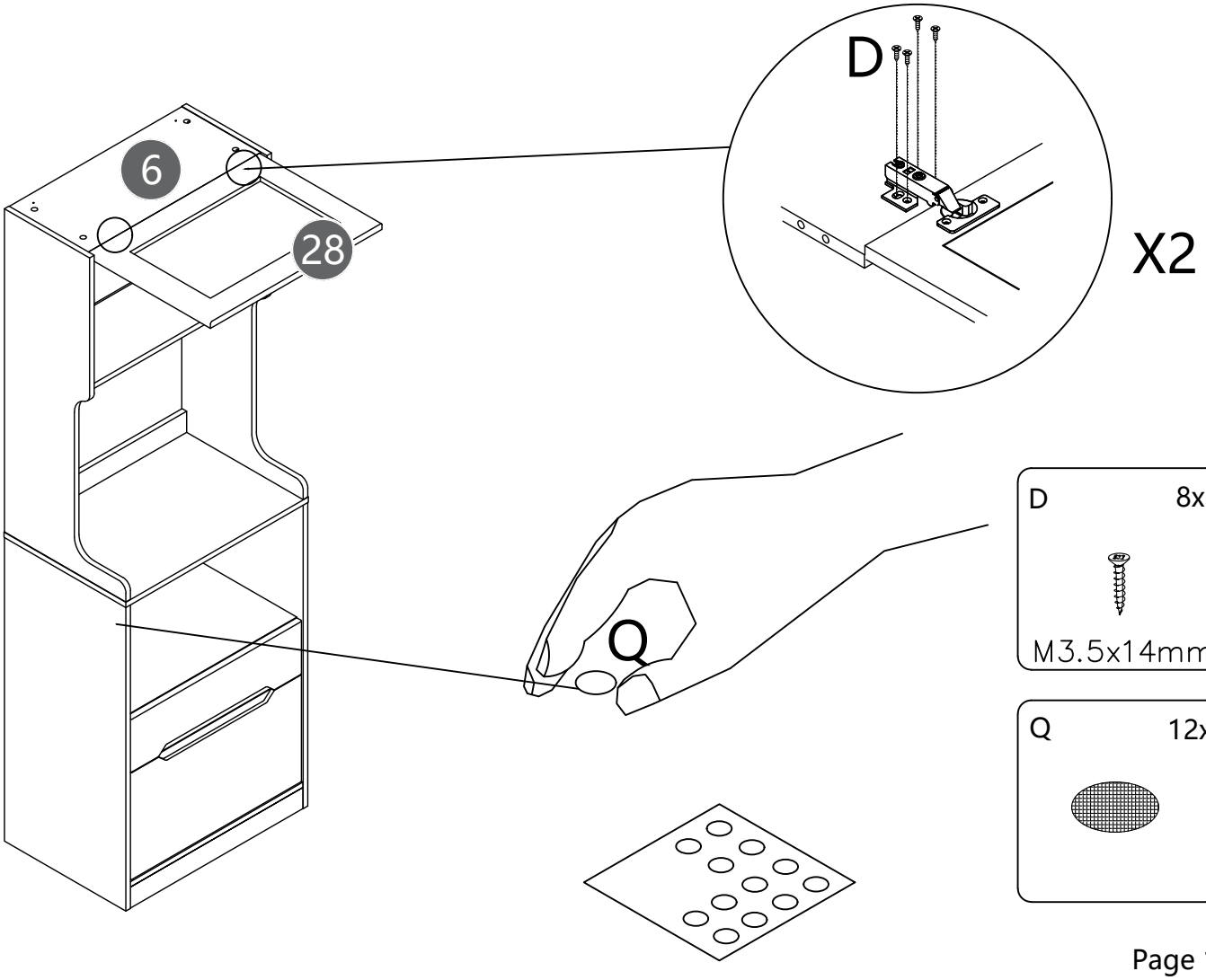

D 8x

M3.5x14mm

Q 12x

27

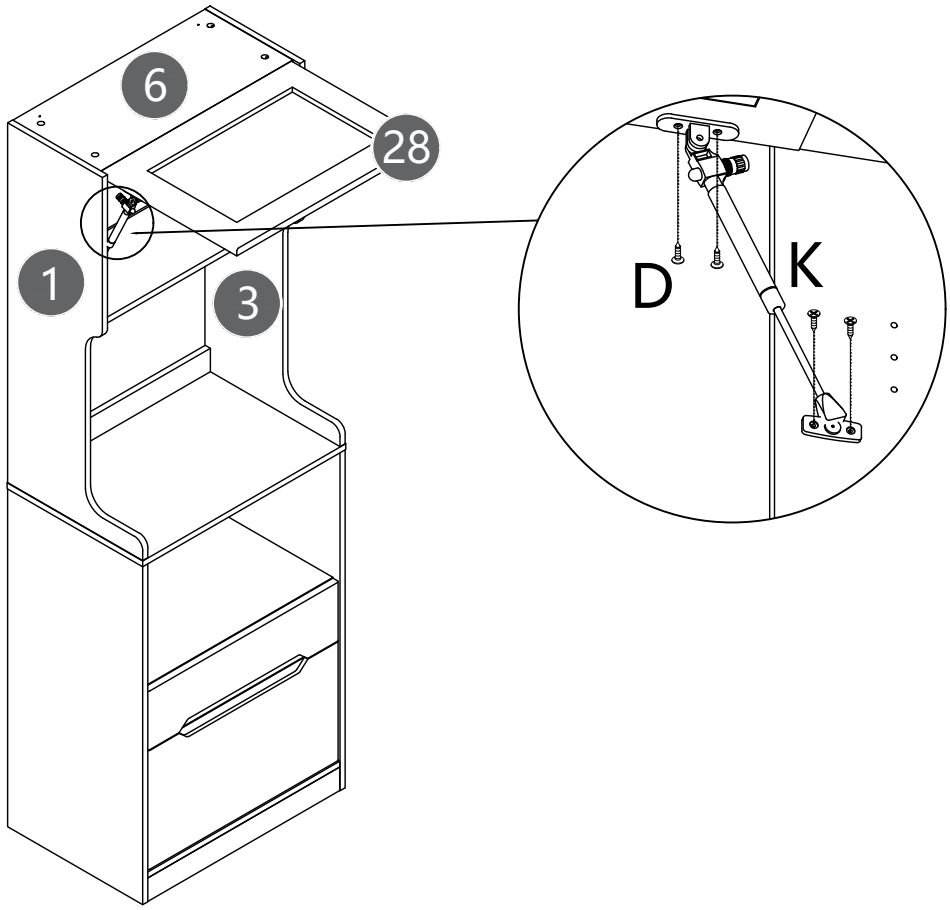

D 4x



M3.5x14mm

K 1x



28

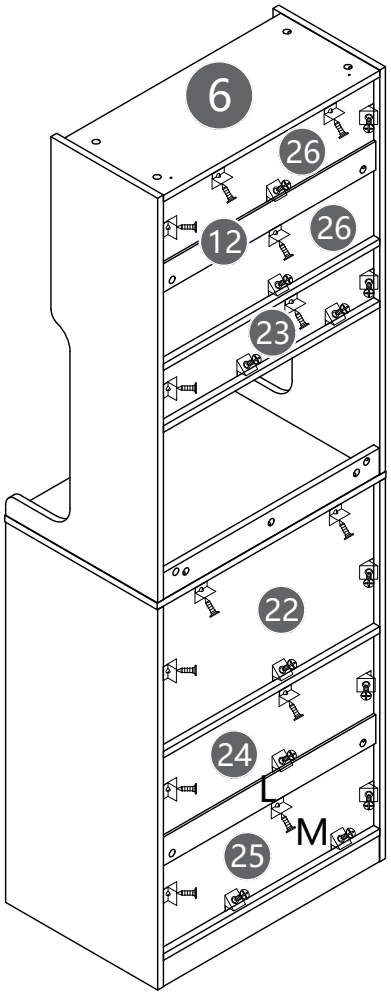

L 26x



M 26x



M3x12mm

29

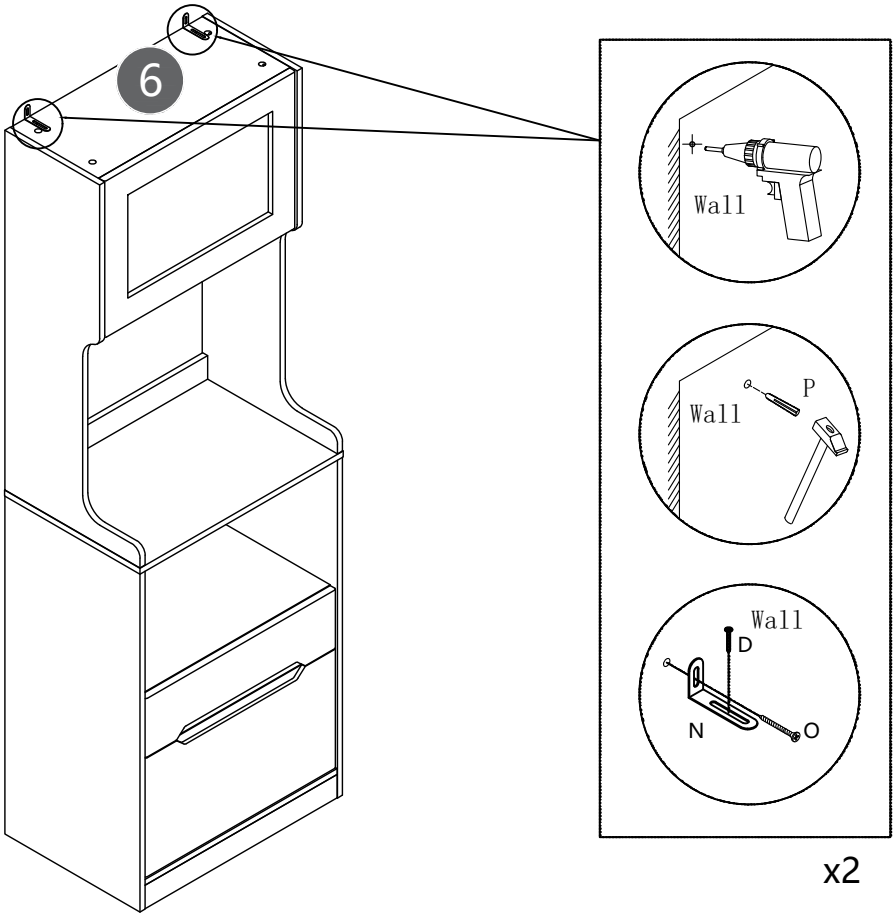

D 2x



M3.5x14mm

N 2x

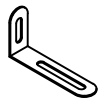

O 2x



M4x50mm

P 2x



30

