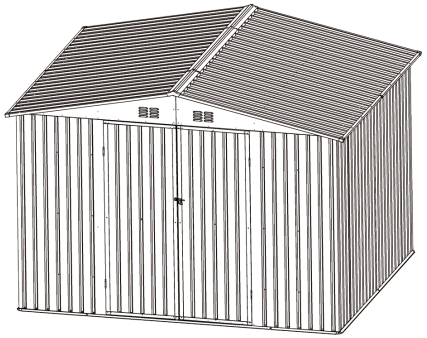

Metal Garden Shed

OWNER'S MANUAL

Size 10 Ft X 8 Ft

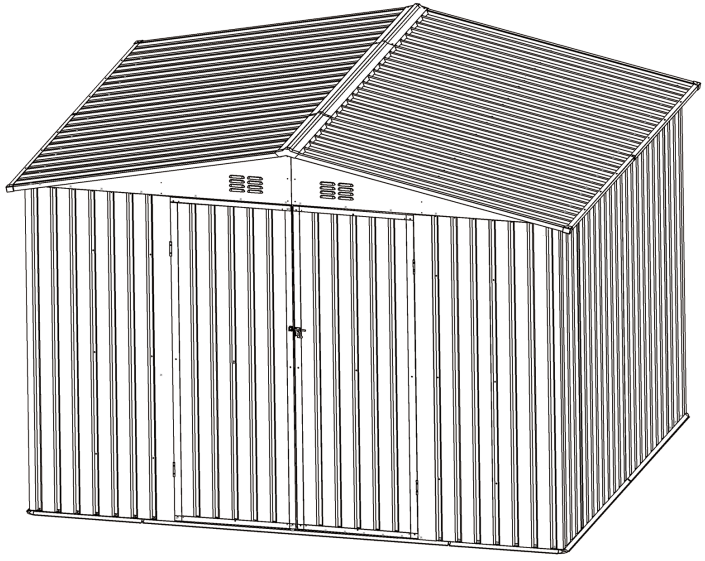

Tall walk in Shed

Quick & Easy Assembly

Ridge Reinforced walls

Wide Double Doors

Available in Various Sizes

Take care of sharp edges;

Please wear gloves;

It will take 2 people 4 - 5 hours to install.

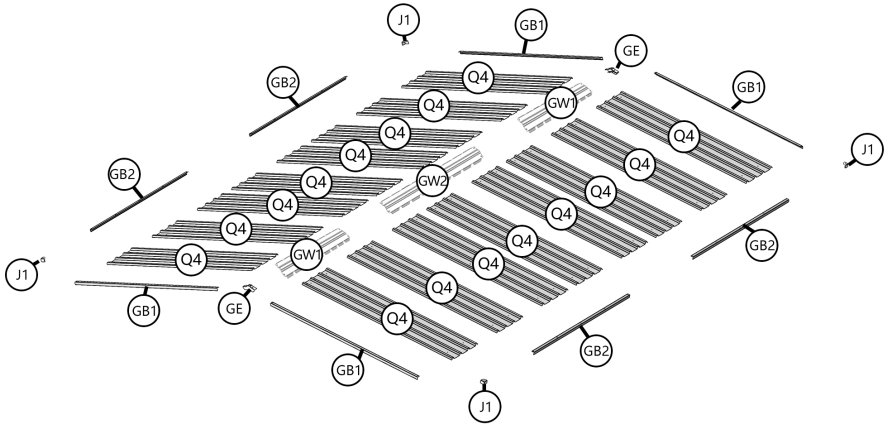
J1
GB1
GE
GB2
Q4
GW1
GW2
J1
GB2
GB1
J1
GB1
GE
GB2
GB1
J1

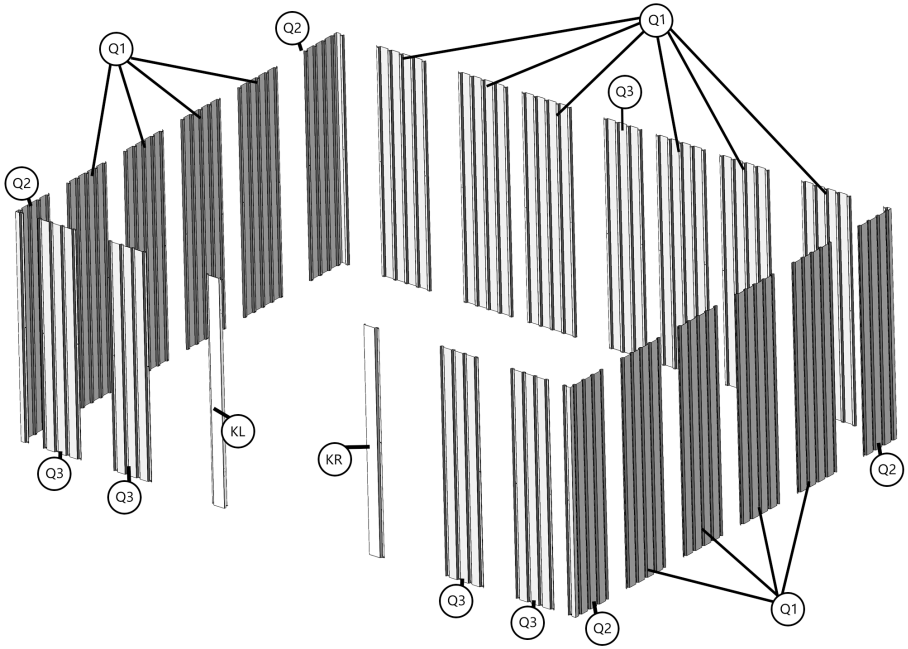
Q1
Q2
Q1
Q3
Q2
KL
KR
Q3
Q3
Q3
Q3
Q2
Q2
Q1

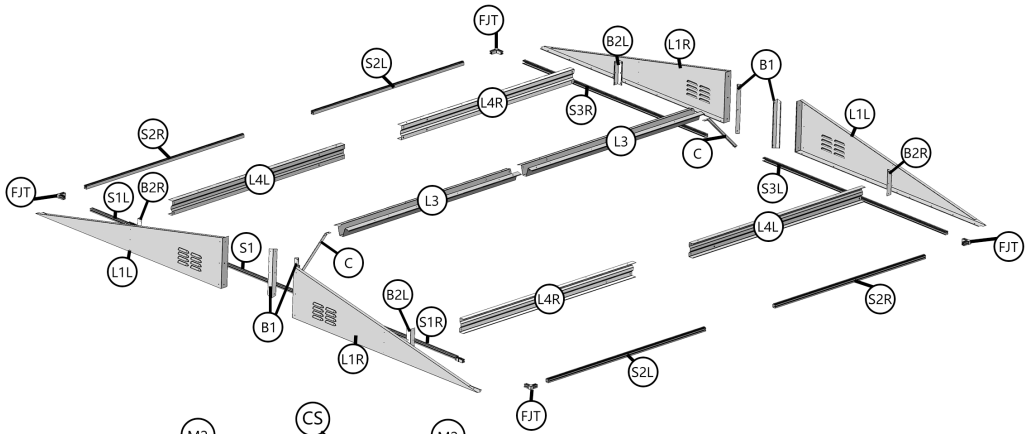
FJT
S2L
B2L
L1R
B1
L4R
S3R
L3
C
L1L
B2R
S2R
L4L
S3L
FJT
S1L
B2R
L3
L4L
FJT
S1
C
L1L
B2L
L4R
S2R
S1R
B1
L1R
S2L
FJT

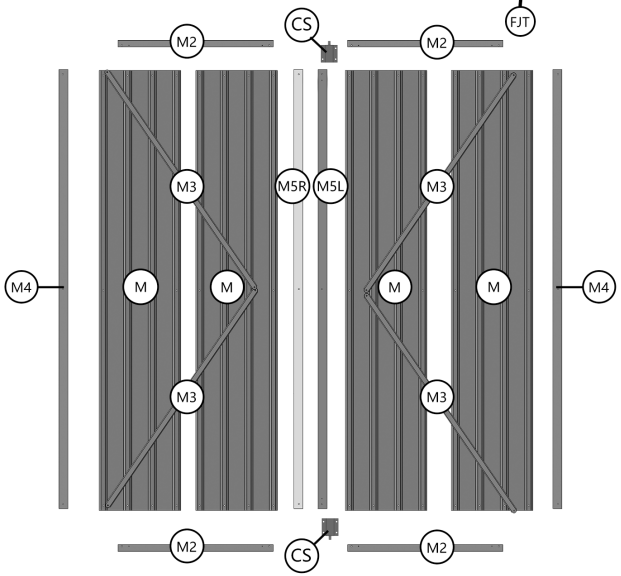
CS
M2
M2
M3
M5R
M5L
M3
M4
M
M
M
M
M4
M3
M3
M2
CS
M2

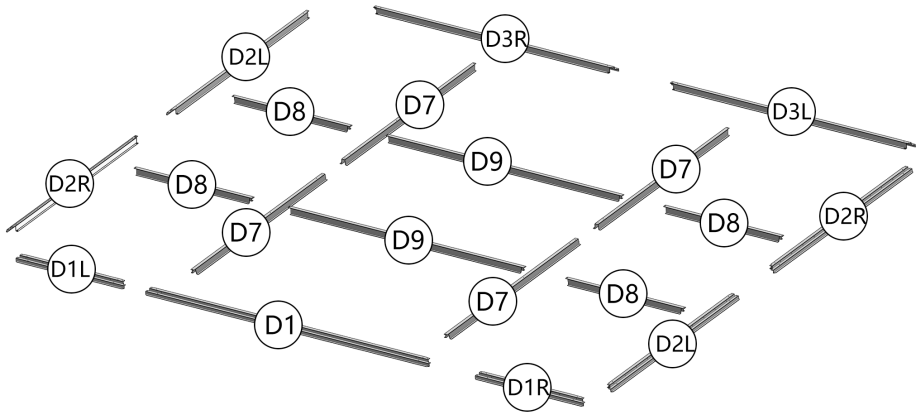
D3R
D2L
D8
D7
D3L
D9
D7
D2R
D8
D8
D2R
D7
D9
D1L
D7
D8
D1
D2L
D1R

PARTS LIST

NO1	PART	QTY
D1		1
D1R		1
D1L		1
D2R		2
D2L		2
D3L		1
D3R		1
S1		1
S1L		1
S1R		1
S2R		2
S2L		2
S3L		1
S3R		1
KL		1
KR		1

NO1	PART	QTY
L1L		2
L1R		2
B1		4
B2L		2
B2R		2
C		2
L3		2
L4L		2
L4R		2
GB1		4
GB2		4
GW1		2
GW2		1
M2		4
M3		4
M4		2

NO1	PART	QTY
M5L		1
M5R		1
Q1		14
Q2		4
Q3		5
Q4		16
M		4
J1		4
FJT		4
GE		2
SK		1
HY		4
CS		2
D7		4
D8		4
D9		2

PARTS LIST

NO1	PART	QTY
F1		420
F8		9
LSM		75
F5		8

NO1	PART	QTY
F3		28
F10		20
F14		400

NO1	PART	QTY
F4		18
F11		22
F16		9

LSM: Install LSM at screw exposure,Prevent collisions.

F14: This part is used with all screws,Such as F1 and F3, located in the external tool roomEasy to seal and waterproof.

Warning & Attention:

-Take care of sharp edges; Please wear gloves;

-All the tags except the foundation are facing inward

-You are advised to read the whole procedure before installing it

-Try to assemble this product on the flat ground, otherwise it is difficult tocarry out;

-It would be much easier to assemble the product with three or morepeople;

-All panels are clearly marked and care should be taken to use the bcorrect one. It is important that these instructions are followed step by step;

-After assembly, please check whether all screws are tightened, to preventparts from falling apart.

Tools:


Gloves


Ladder


Electric drill


Phillips screwdriver


Safety Helmet Hat


goggles

Unit: mm

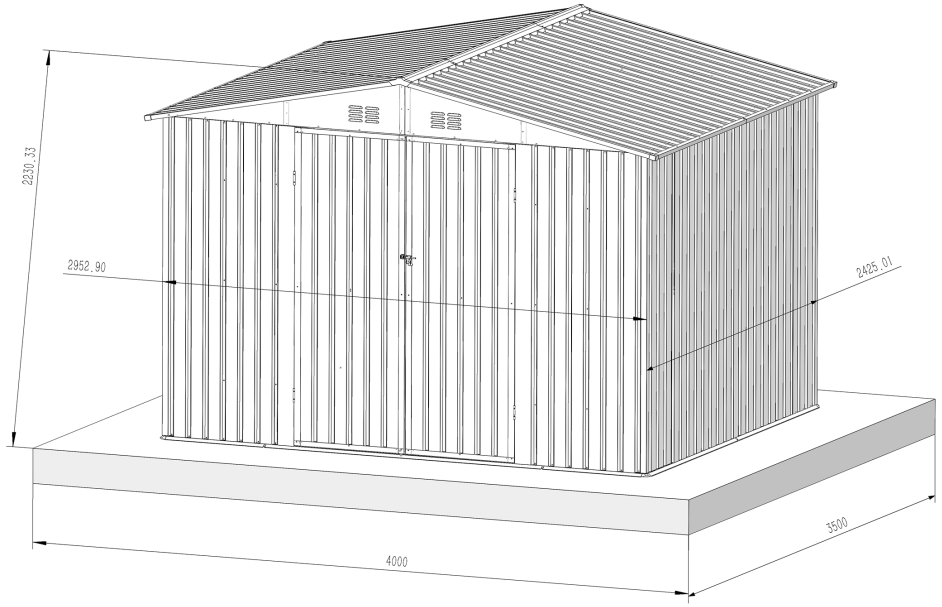

NO.	PART	Qty.
D1		1
D1L		1
D1R		1

NO.	PART	Qty.
D2R		2
D2L		2
D3R		1

NO.	PART	Qty.
D3L		1
F1		28
F8		9

NO.	PART	Qty.
F16		9

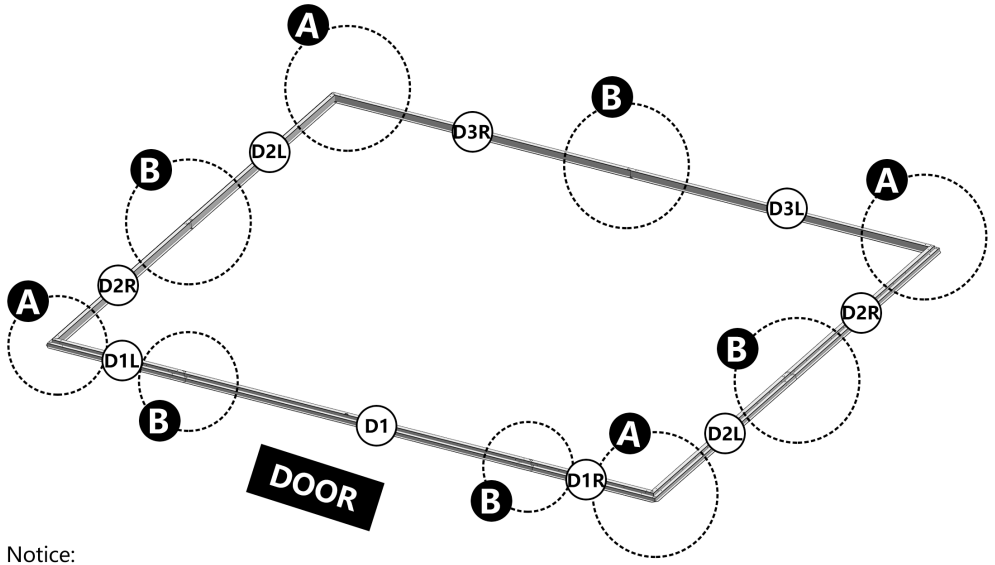

Notice:

A: The base frame of the four corners is spliced together and fixed with F1 as shown in the picture.

B: Splice the foundation at point B, align the holes, and secure with F1.

F8 Installation: After the overall installation is completed, if it is a mud floor, please install the F8 to the position shown in the figure, and the expansion screws can be installed on other floors.

⚠ The installation space should be flat, and at least 4000x3500mm.The foundation is fixed on the ground in this space.

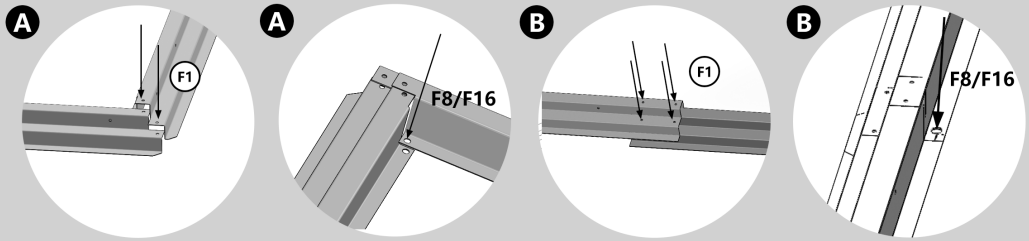

NO.	PART	Qty.
D7		4
F1		8

NO.	PART	Qty.
D8		4
F5		8

NO.	PART	Qty.
D9		2

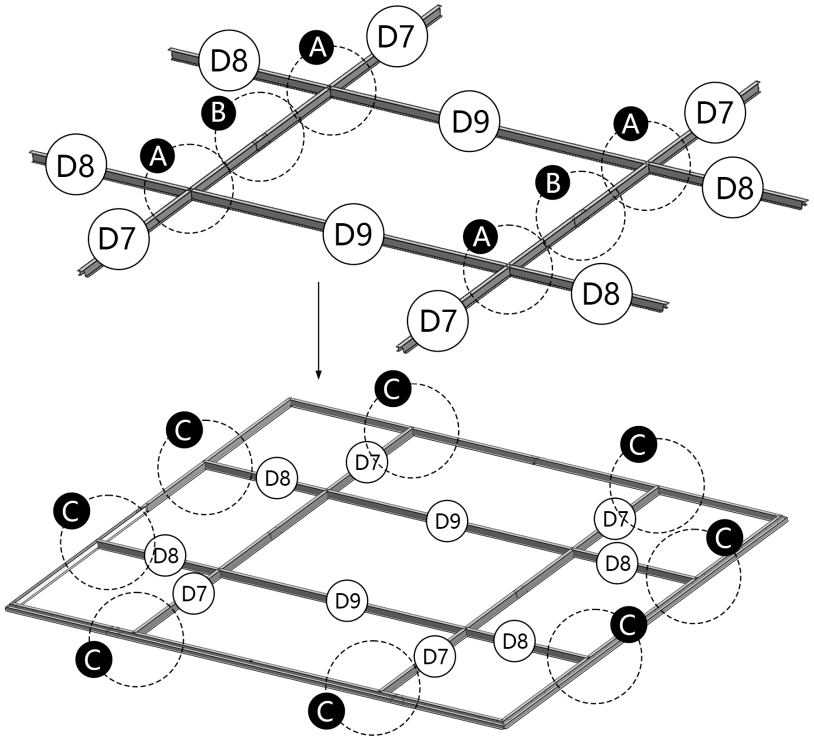

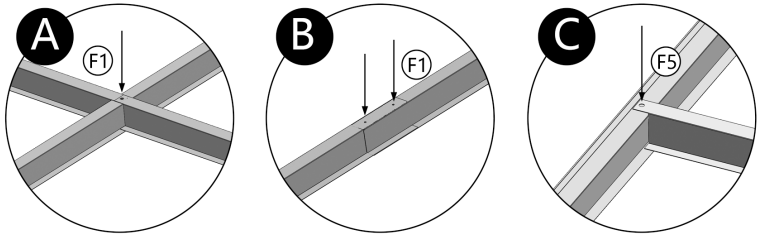

Assemble D7, D8, and D9 according to the positions shown in the diagram, align the holes, and use F1 to secure them together. Then place the assembled accessory inside the frame, align it, and use F5 to drill holes yourself to secure the accessory.

NO.	PART	Qty.
S1R		1
S1L		1
S1		1

NO.	PART	Qty.
S2L		2
S2R		2
S3L		1

NO.	PART	Qty.
S3R		1
F1		13
FJT		4

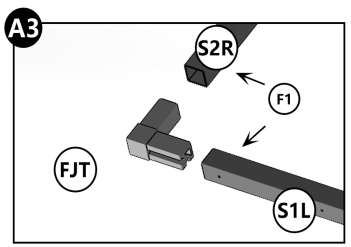

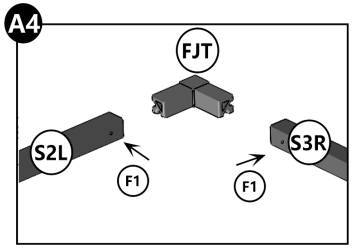

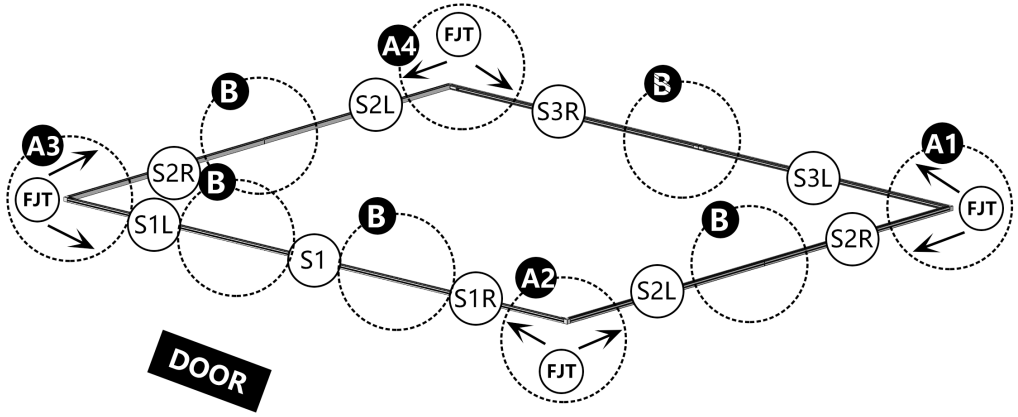

Notice:
A: FJT is installed at the junction of two arrows, please install the direction indicated by the arrow (→←), fix it with F1 after installation.
B: Connect two places as shown and fix them with F1.

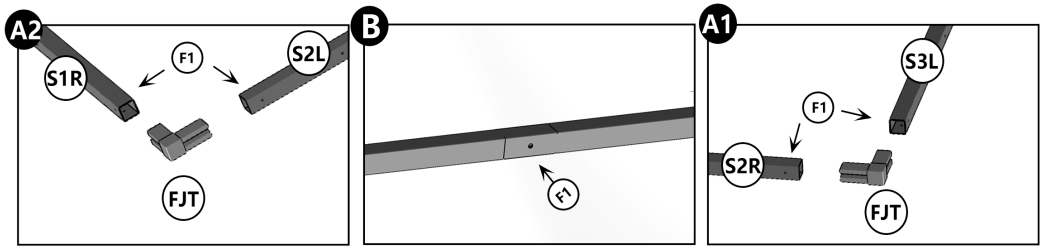

NO.	PART	Qty.
Q2		4
F1		12

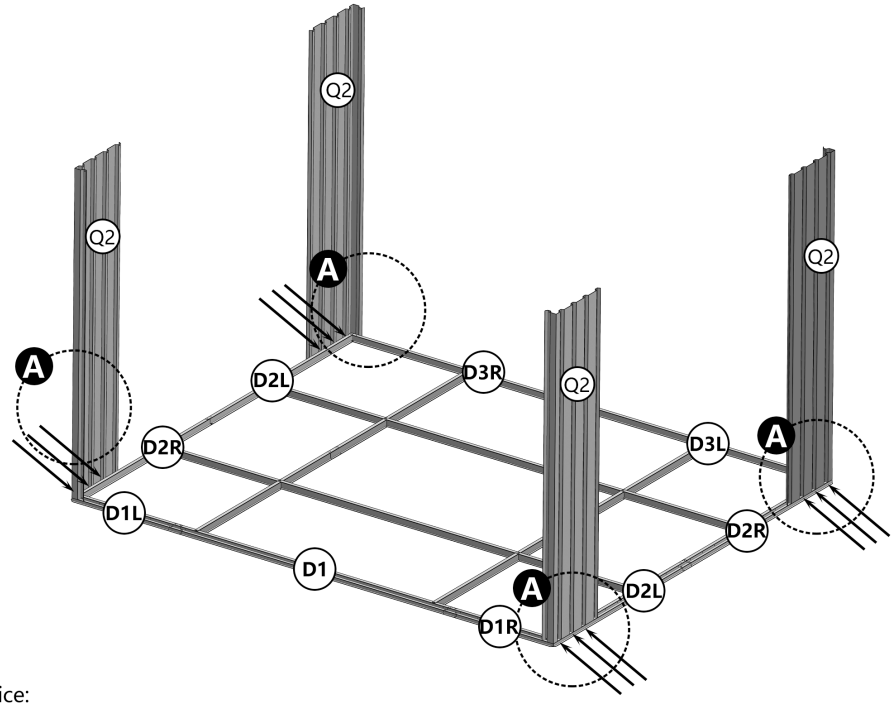

Notice:

In this step, only the three holes in the middle of Q2 need to be installed and reserved on both sides.

The reserved holes are shared with the following steps.

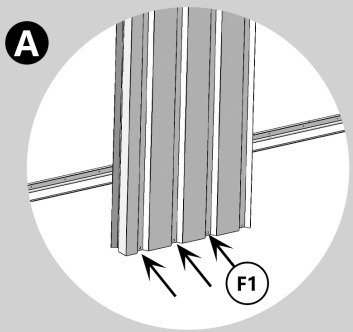

NO.	PART	Qty.
F1		12

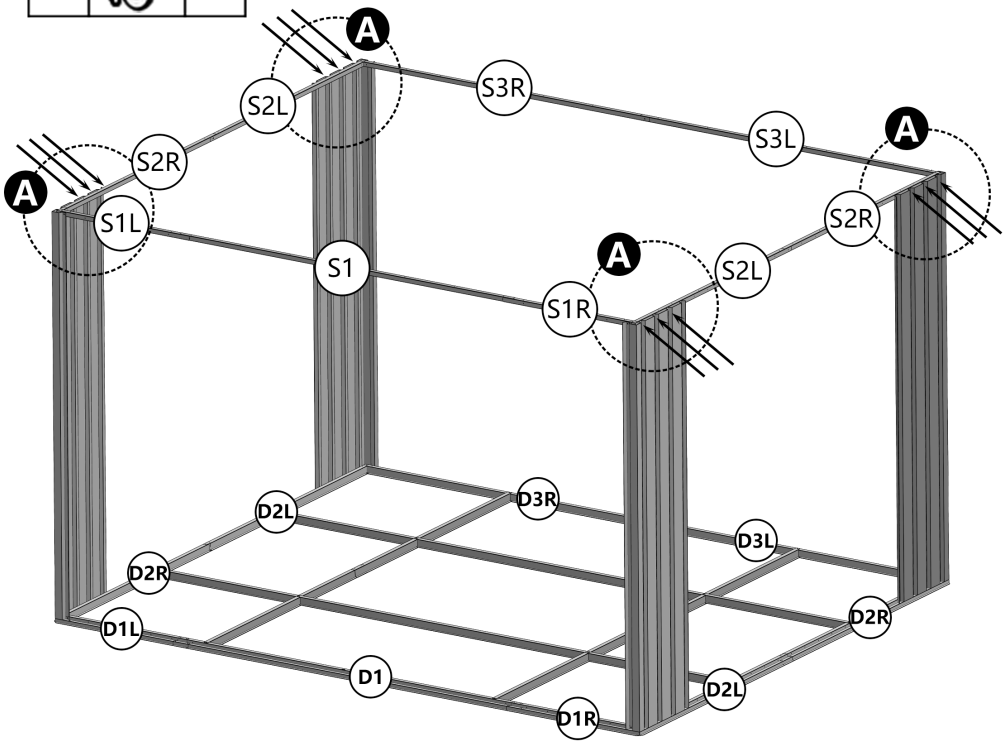

Notice:

In this step, only the middle three holes need to be installed, and both sides need to be reserved.

The reserved hole is shared with other steps.

The walls are tiled on the outside and framed on the inside

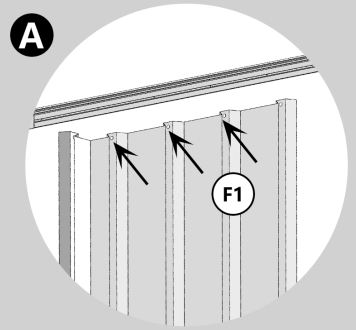

NO.	PART	Qty.
Q1		14
Q3		5

NO.	PART	Qty.
F11		20
F1		114

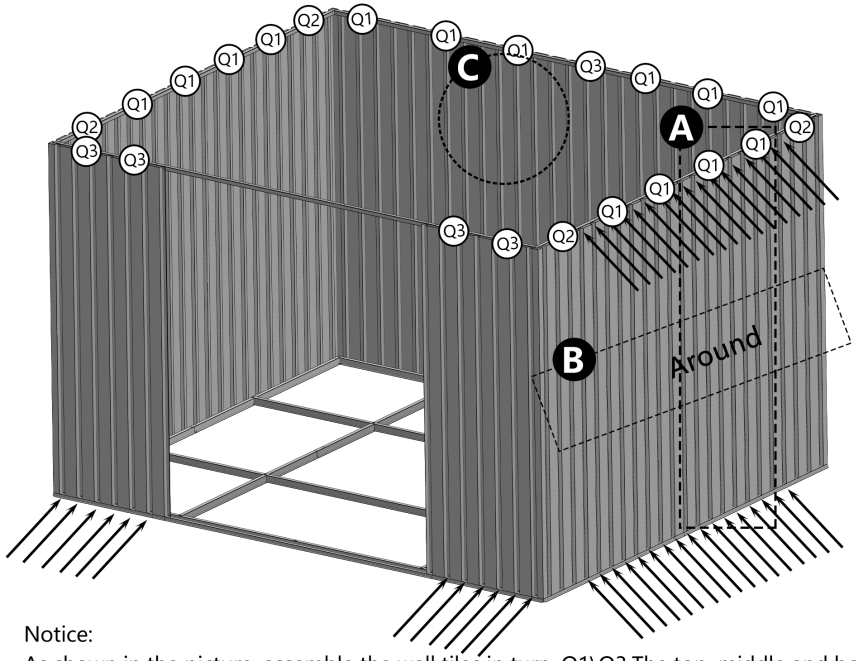

Notice:
As shown in the picture, assemble the wall tiles in turn, Q1\Q3,The top, middle and bottom of the wall tiles need to be screwed,
The upper and lower ends are fixed with F1, and the middle is fixed with F11.
(Reserve the required hole positions for the next wall panel)

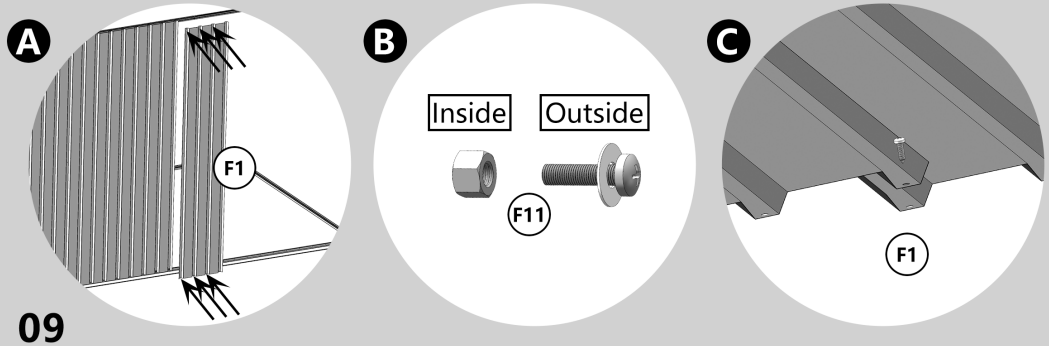

NO.	PART	Qty.
KL		1
KR		1
F1		8

NO.	PART	Qty.
F11		2

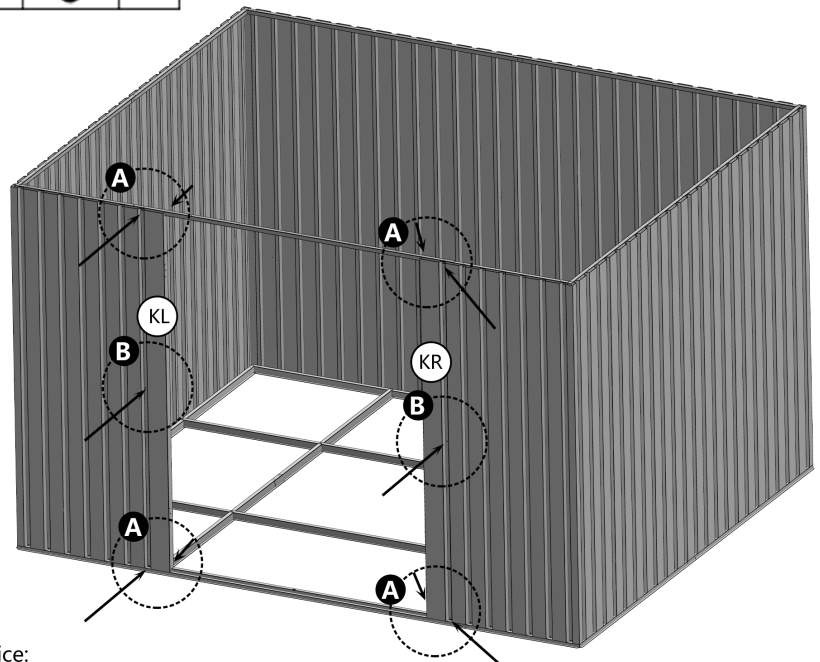

Notice:
Note: As illustrated, both the upper and lower sections of KL and KR require screw fastening.
Secure the upper and lower ends using F1, and fasten the central holes using F11.

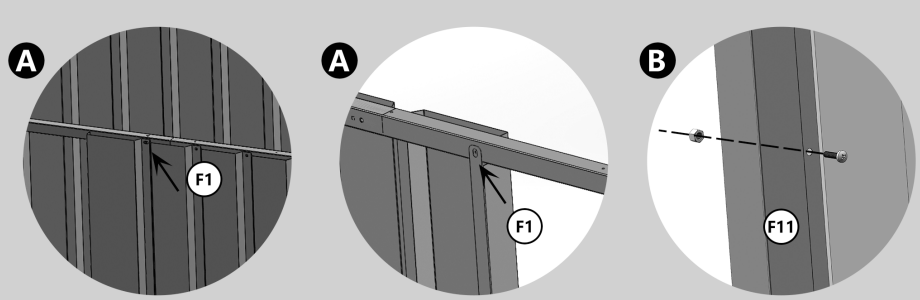

NO.	PART	Qty.
B1		4
B2L		2

NO.	PART	Qty.
B2R		2
L1L		2

NO.	PART	Qty.
L1R		2
C		2

NO.	PART	Qty.
F3		6
F1		20

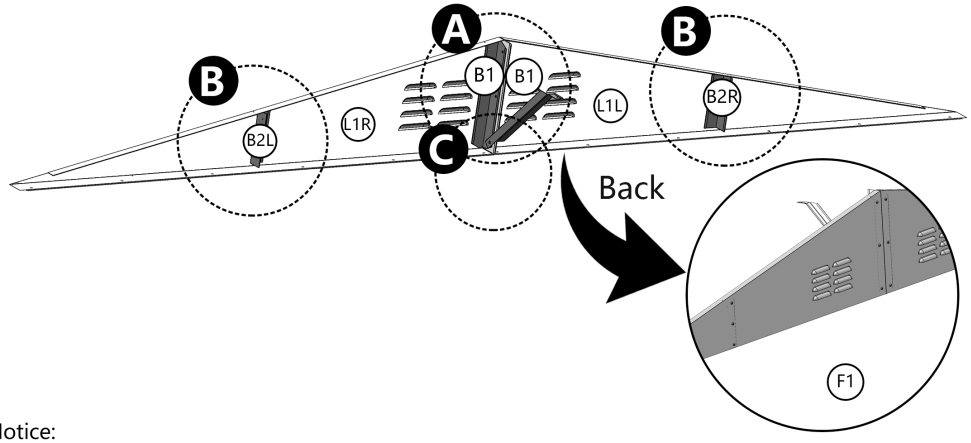

Notice:
Step A: Connect LIL and LIR with 2 B1s, fix F3 (fix the top two holes first),
There are holes on both sides of B1, and the large holes are 2 B1 and L1R and L1L connected together.
The position of the small hole is 2 B1s, connected to L1R and L1L respectively,
and fixed with F1 from the outside to the inside.
Step B: Fix B2R and B2L to LIL and LIR with F1 as shown in the picture.
There are holes on both sides of B2R and B2L, and the big holes of B2R and B2L connecting L4L and L4R.
The small holes of B2R and B2L, connected to L1R and L1L respectively,
and fixed with F1 from the outside to the inside.
Step C: Install C into the bottom-most hole of B1 as shown in the diagram, and secure
both B1, L1L, and L1R together using F3.

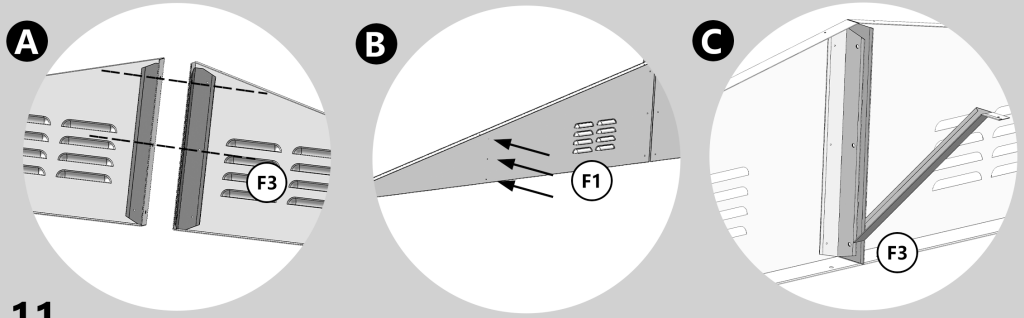

NO.	PART	Qty.
F1		20

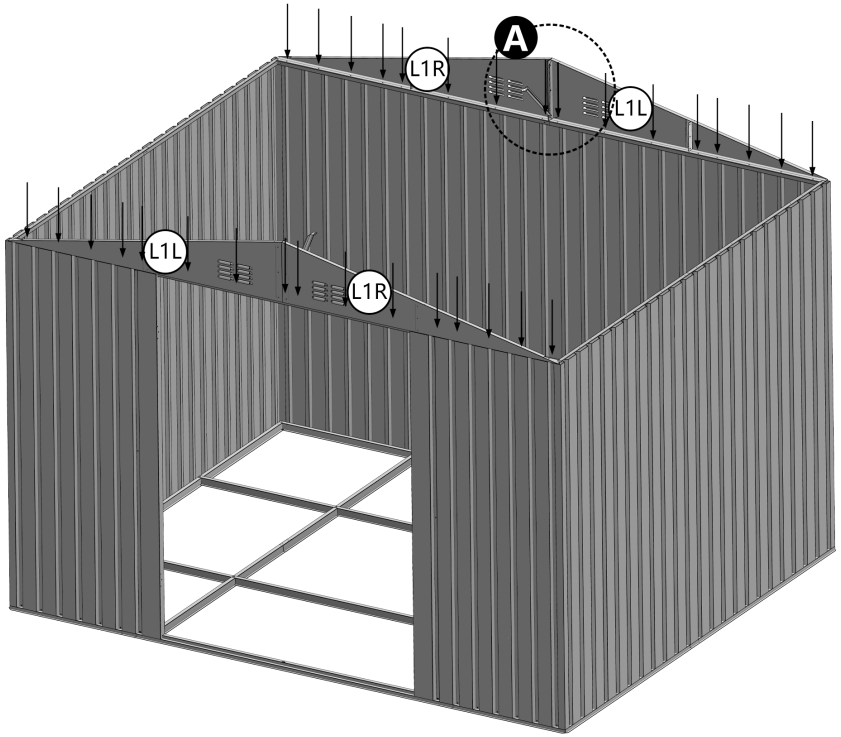

Notice:
Install the assembled roof support
pieces on the wall tile in turn according to the holes, and fix them with F1.

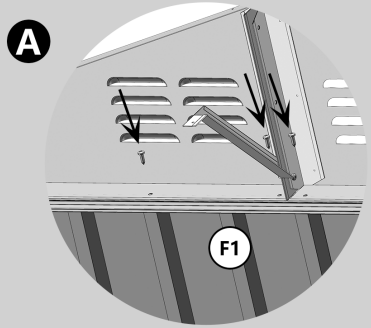

NO.	PART	Qty.
L3		2
L4L		2
L4R		2

NO.	PART	Qty.
F3		22
F1		2

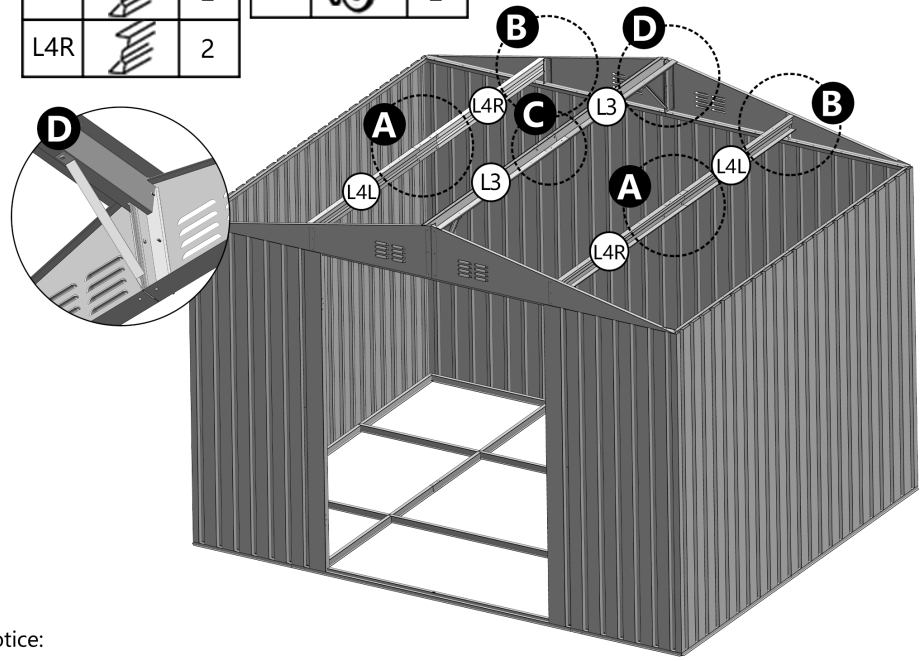

Notice:

Step A: Connect the L4R and L4L, and install the two sides outwards, as shown in the figure(opening outward).

Step B: Connect the connected L4R and L4L to the B2L and B2R large holes.

Step C: Connect 2 L3s and place them on L1R and L1L.

Installation is not required for the time being, and the holes are shared with Q4.

Step D:Bend one end of part C, install it on L3, and fix it with F1.

NO.	PART	Qty.
Q4		16
F1		96

Special note: The installation of F1 must add plastic gaskets, which can play the role of roof waterproof.

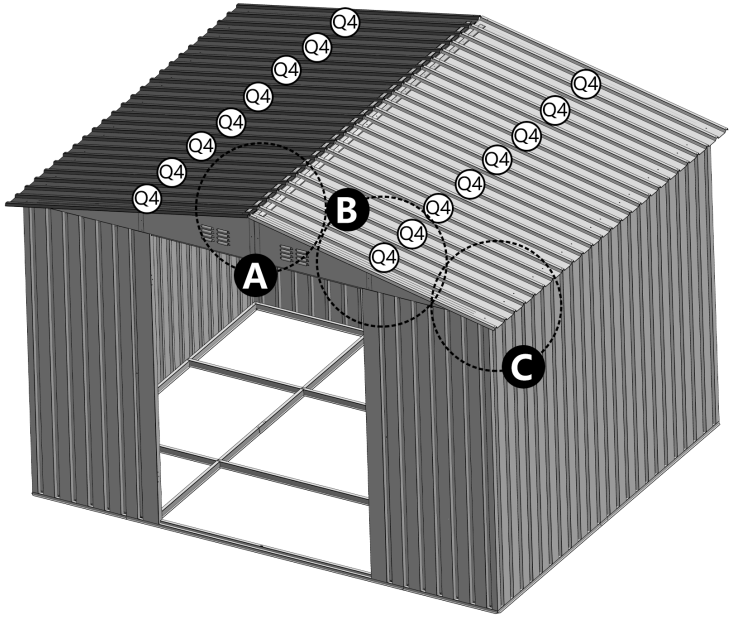

Notice:

Q4 Installed in sequence, every 2 pieces overlap,

There are 2 rows of holes in the tile, and the one near the edge is on the top, as shown in Figure A.

The distance from the edge is far below, as shown in Figure C.

Each Q4 requires a fixed 3 rows of F1, as shown in Figure ABC.(The end of the tile with holes should face outward.)

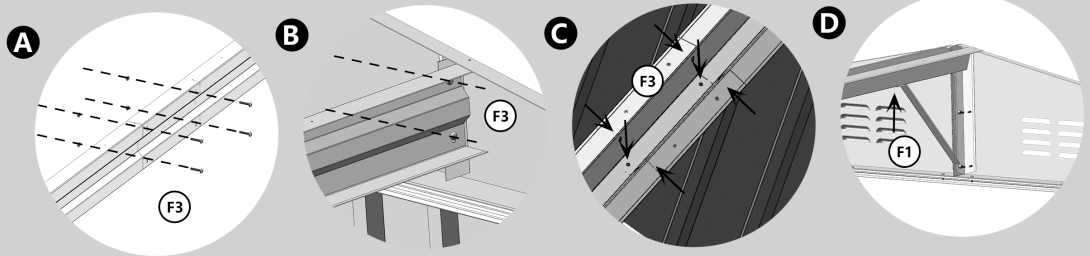

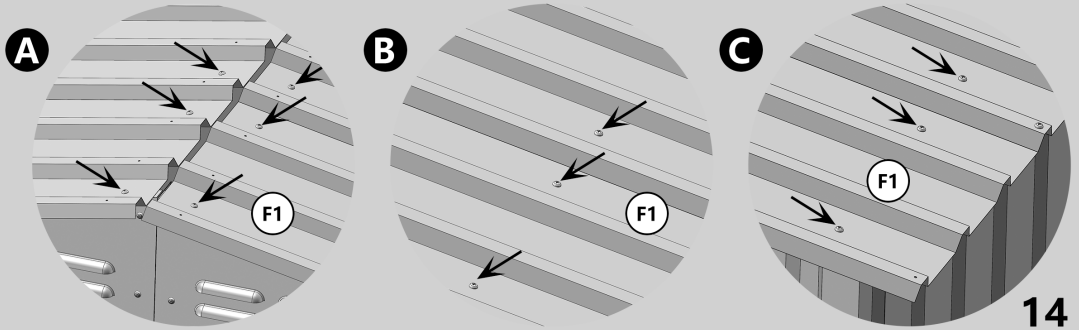

NO.	PART	Qty.
GW1		2
GW2		1

NO.	PART	Qty.
F1		6

Special note: The installation of F1 must add plastic gaskets, which can play the role of roof waterproof.

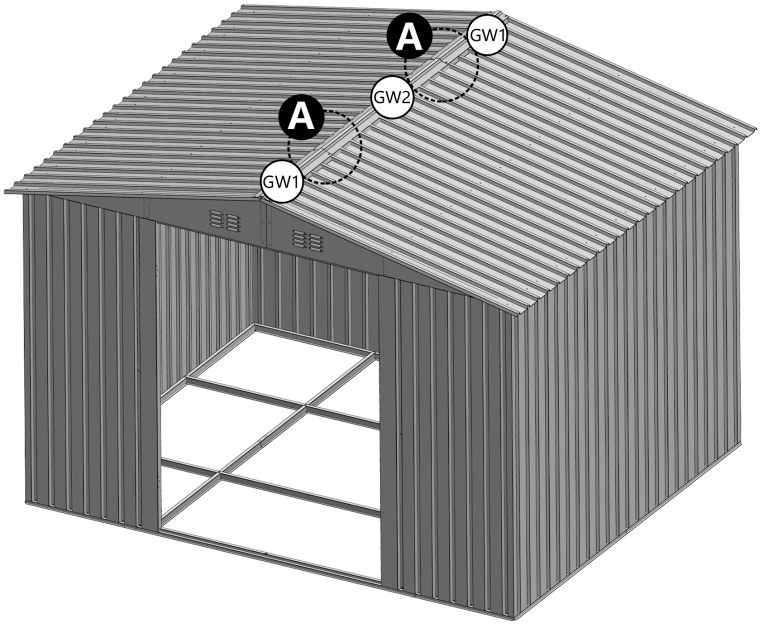

Notice:

Step A: GW1,and GW2 are fixed at the top with F1.

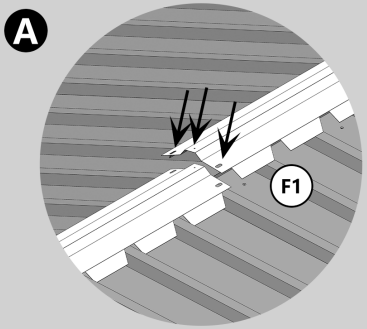

NO.	PART	Qty.
GB2		4

NO.	PART	Qty.
F1		24

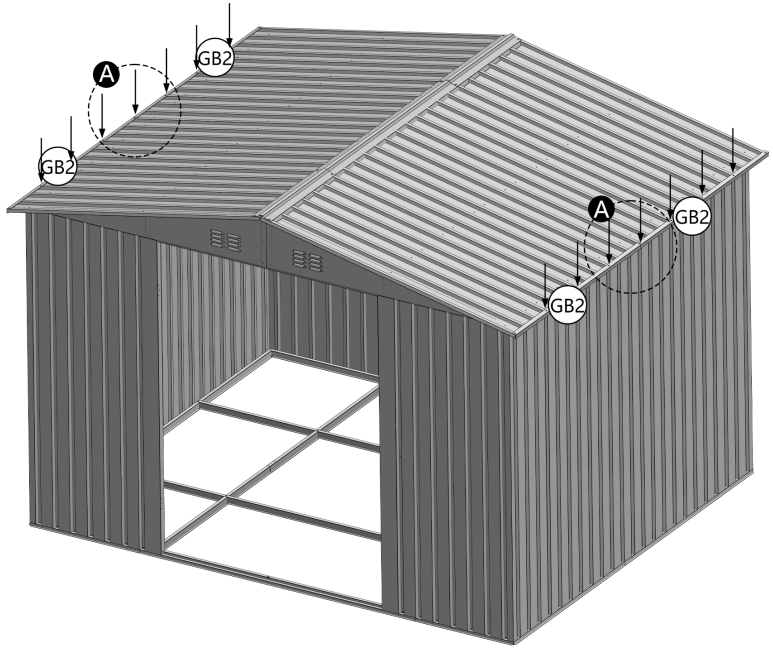

Notice:

A: Place GB2 on both sides of the roof. First secure both GB2 units to Q4 using F1, then secure the center hole of GB2 using F1.

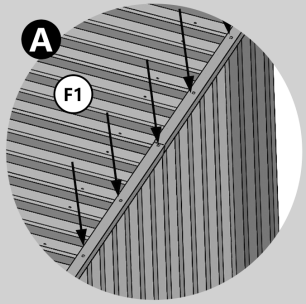

NO.	PART	Qty.
GB1		4

NO.	PART	Qty.
J1		4

NO.	PART	Qty.
F1		8

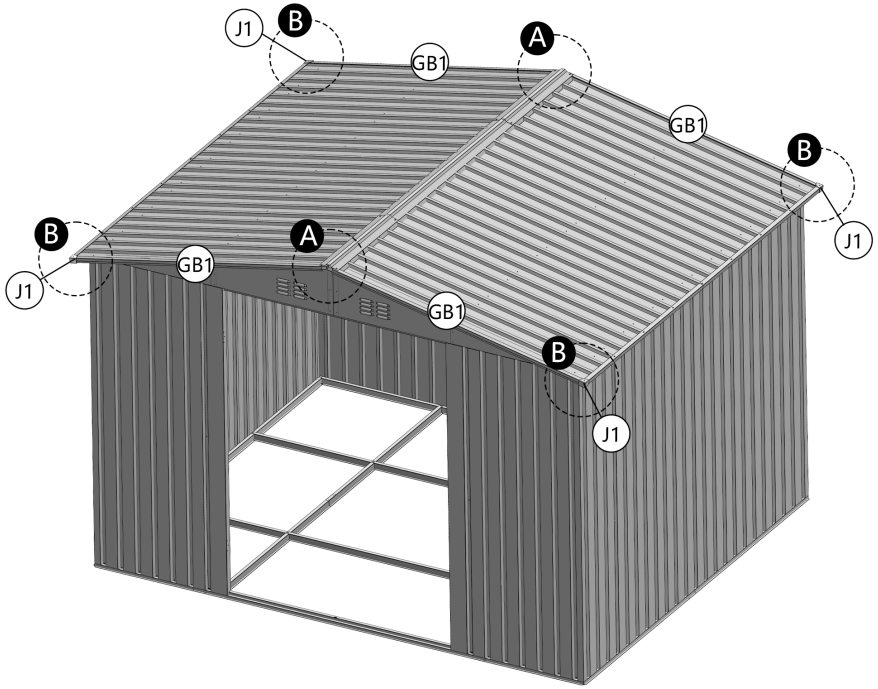

Notice:
A: Position GB1 at the front and rear of the roof. Use F1 to secure GW1, GB1, and Q4 together.
B: Take J1 and place it at each corner of the roof. Use F1 to simultaneously secure J1, GB1, GB2, and Q4 together.

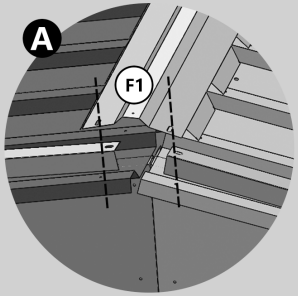

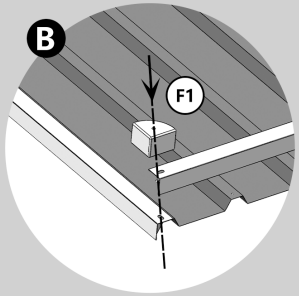

NO.	PART	Qty.
GE		2

NO.	PART	Qty.
F1		2

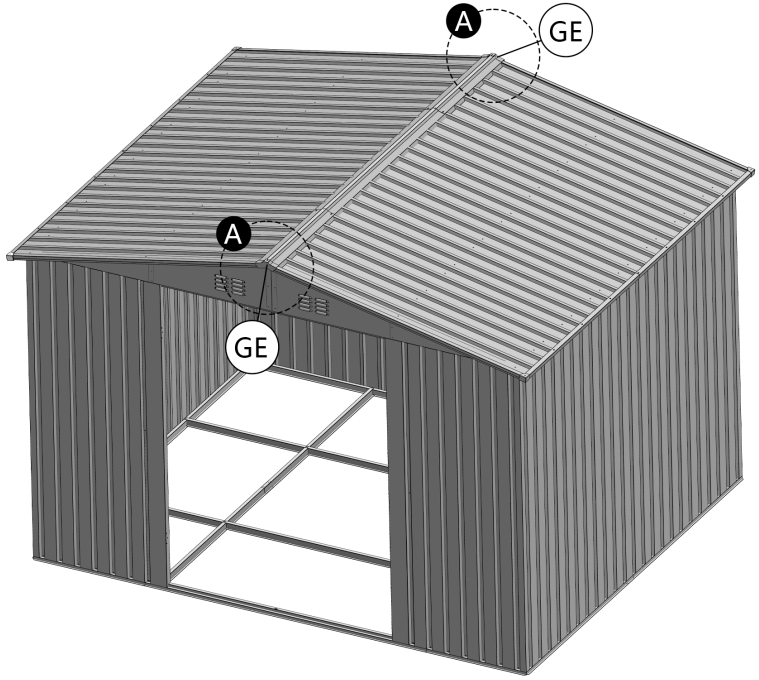

Notice:
A: Position GE at the front and rear ends of the roof. Use F1 to secure GE to GW1 from the top.

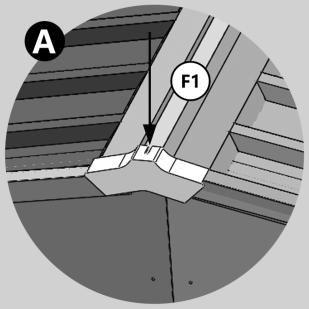

NO.	PART	Qty.
M2		4
M3		4
M4		2

NO.	PART	Qty.
M5L		1
M5R		1
M		4

NO.	PART	Qty.
SK		1
HY		4
CS		2

NO.	PART	Qty.
F1		10
F4		18
F10		20

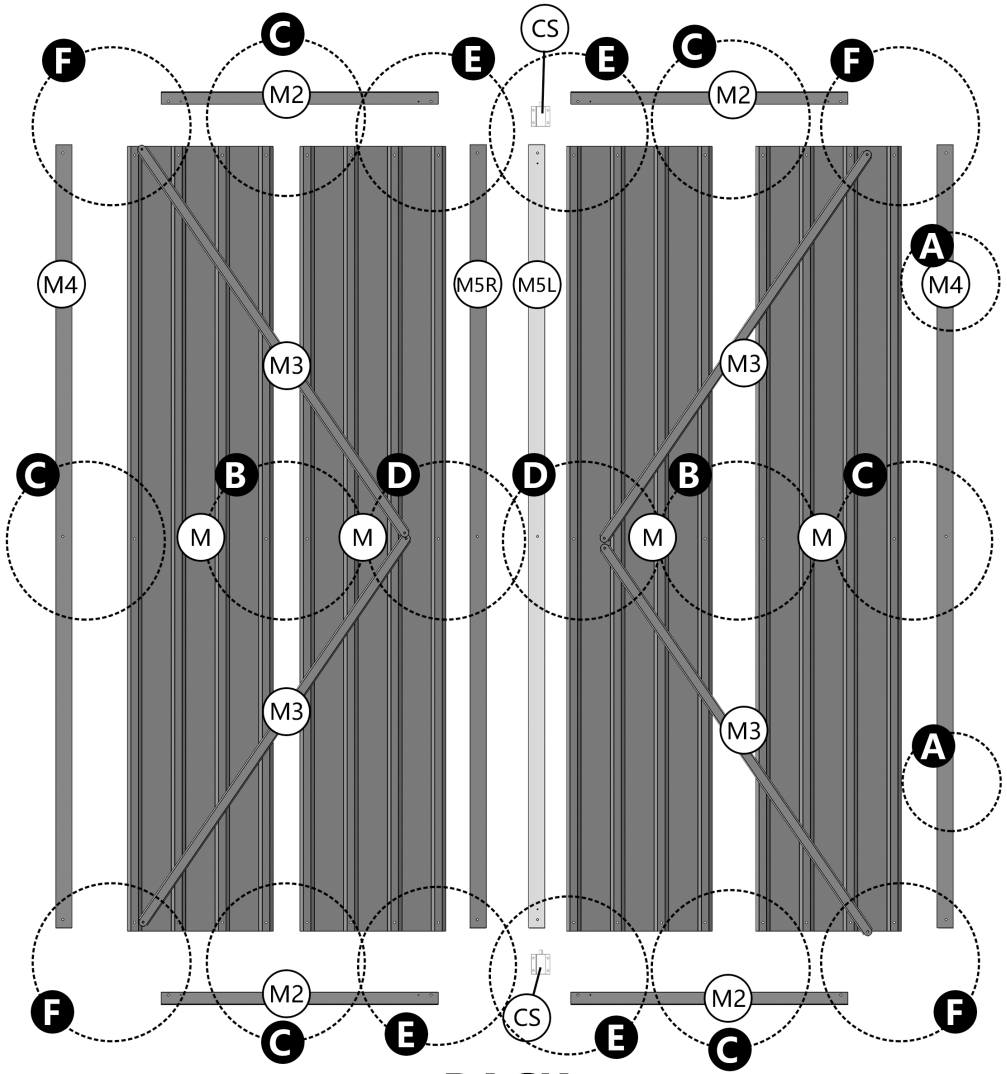

BACK

NO.	PART	Qty.
F4		18

NO.	PART	Qty.
F10		8

NO.	PART	Qty.
F11		2

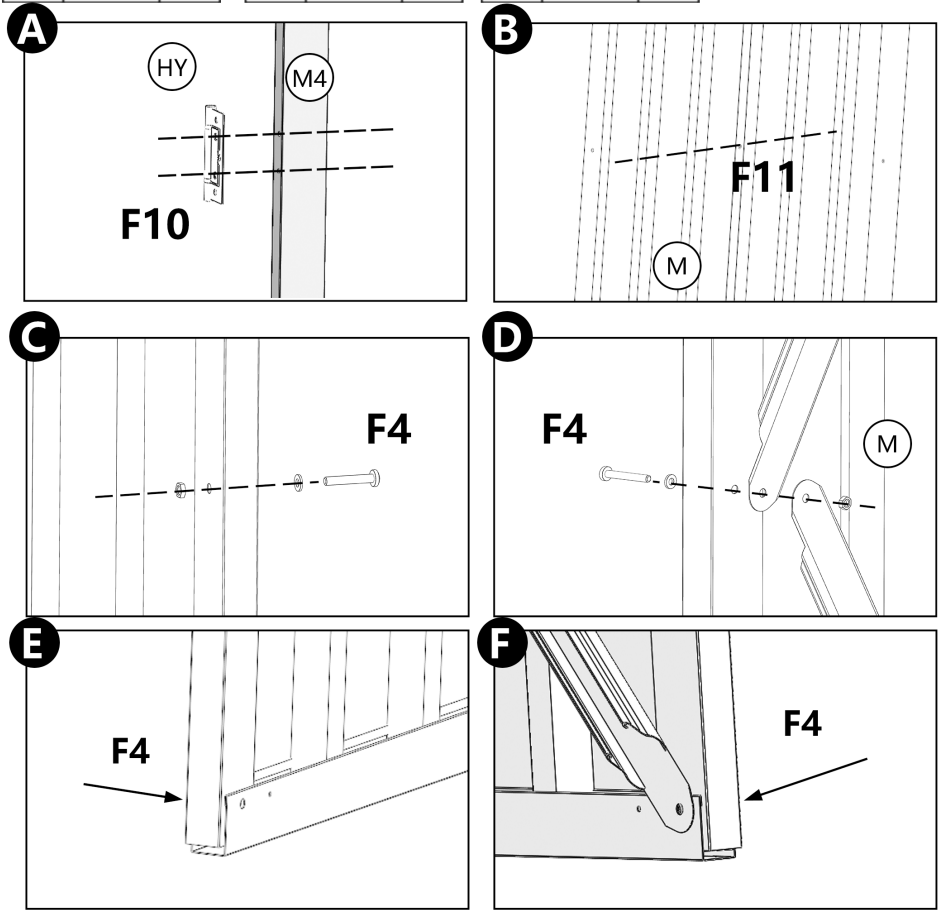

Special Note: Before installation, HY must be mounted on M4 and secured with F10. Each M4 must have two HY units installed, as shown in Figure A.(The M4 has no front or back.)
Then align the holes on two M units and secure them with F11, as shown in Figure B.
Mount the assembled unit from Figure A onto M, then install M2 at the top and bottom of M. → Install M4/M5L/M5R on the left and right sides of M. → Mount M3 inside M. Secure the center of the upper and lower M2 with screw F4, along with M4/M5L/M5R, as shown in Figures C and D.
E: Insert the F4 screw externally, simultaneously securing the M2 and M5R. For the other door, insert the F4 screw to secure the M2 and M5L, then position the CS internally and secure it from the inside using the F1 screw.
F:Secure M, M2 and M4 together from the front using F4.
(The side with more holes on the M5L and M5R should face the front.)

NO.	PART	Qty.
F1		4
CS		2

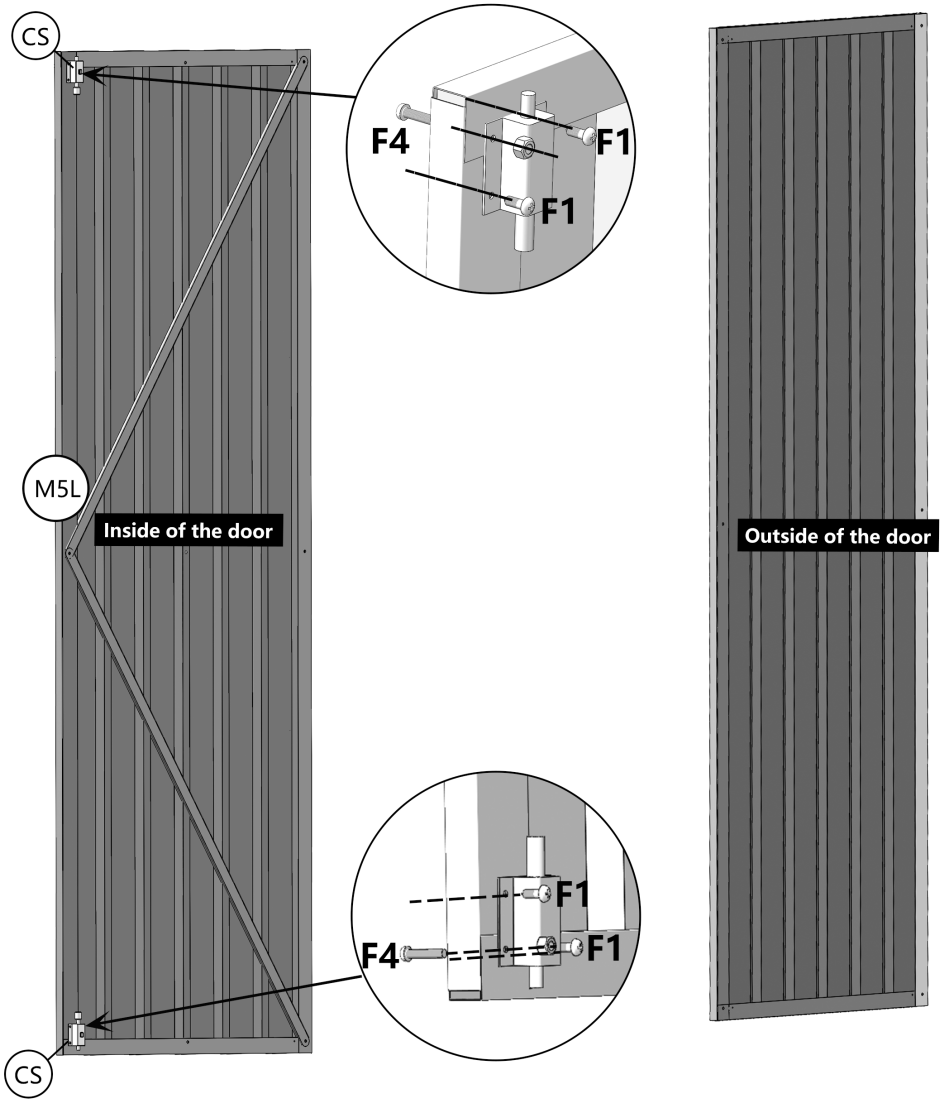

NO.	PART	Qty.
F10		12

Notice:

Secure the installed door to the door frame with F10

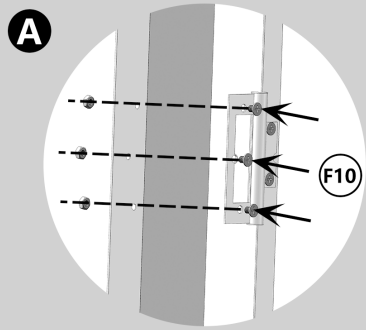

NO.	PART	Qty.
SK		1
F1		6

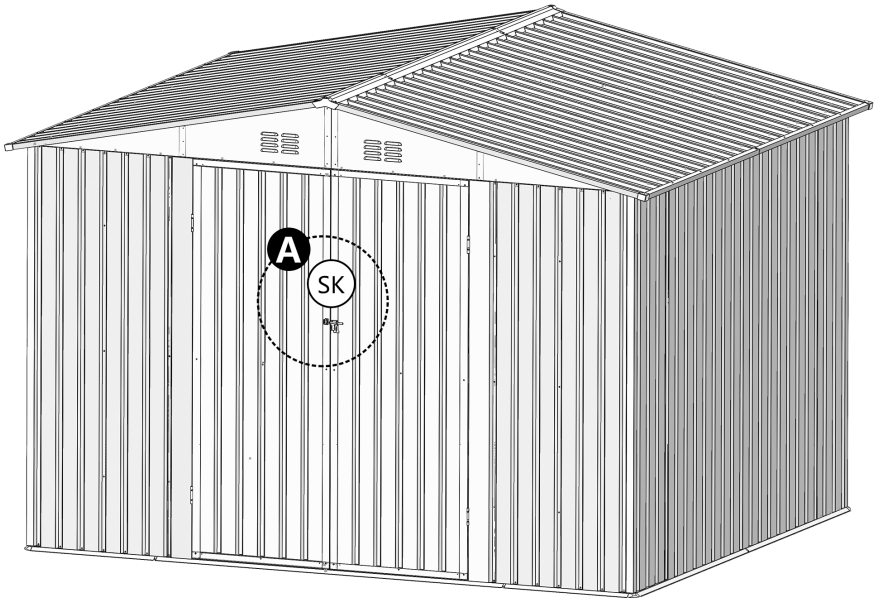

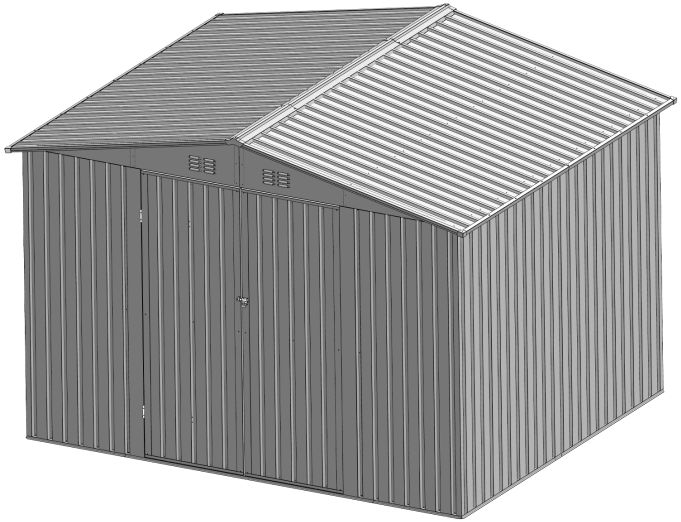

Notice:

Mount SK to the door (M5R/M5L), secure with F1, mount A1 on one side of the door,
Install the A2 section on the other side, as shown.

