Manual Recliner Chair with Swivel and Rocker Assembly Instruction

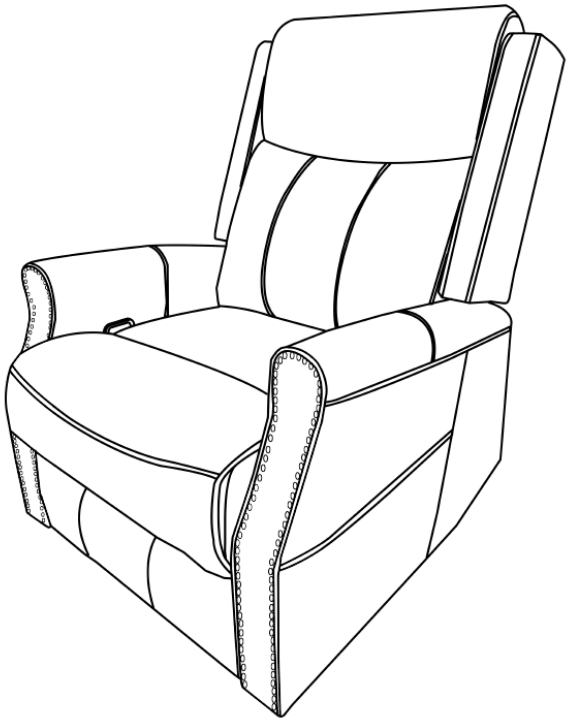

FAQ

Q1: Missing parts when received.

A: If you find some parts are missing from the box, please kindly send us messages to let us know the name of missing part regarding to the first page of instructions. We will send replacement to you asap.

Q2: Some parts damaged when arrived.

A: Please send clear photos about damaged part to us as attachment, we will check and offer you best solution soon.

Q3: The chair is stuck on reclining position, and no response when you pull the handle.

A: Please contact us and send clear photos or videos about the damage, we will offer you best solution soon.

How to remove the chair ?

Please note that you need to take apart the backrest before.

1.Pull out the ears from the back

2.Pull up the buckles firstly while take the backrest out from the base.

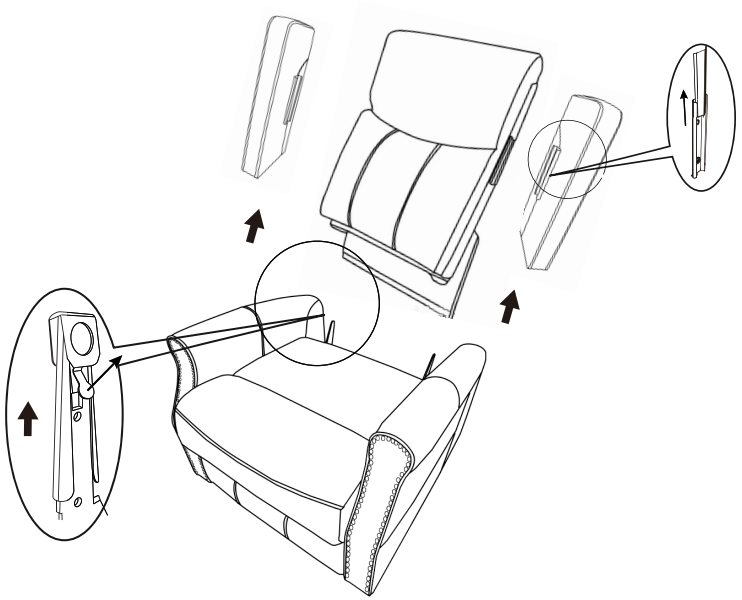

Please make sure you've got everything lists as following before assembly.

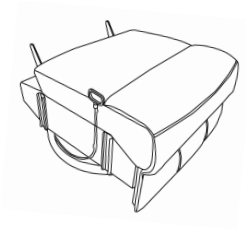

A Chair base

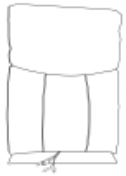

B Backrest

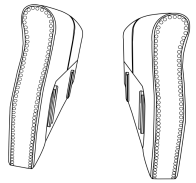

C Armrest x2

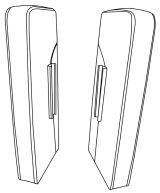

D Ear x2

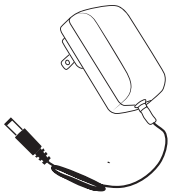

E Power cord



F Remote control

STEP 1

Insert Armrests (C) to the chair base(A),make sure the slots on the armrests fully assemled to the bottom part.

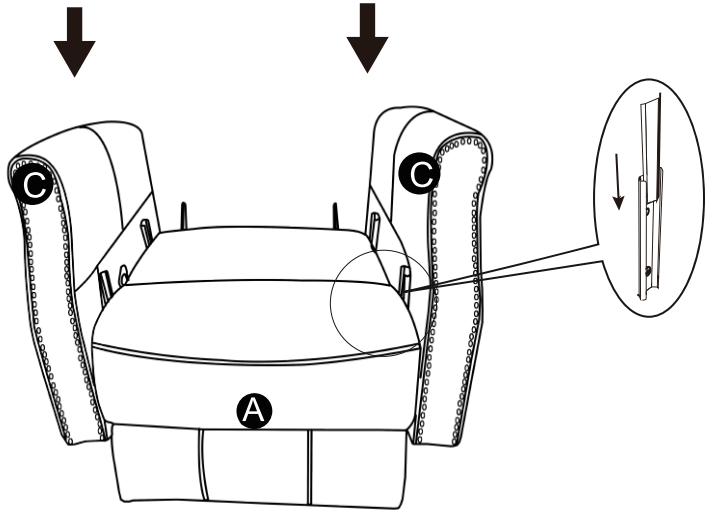

How many degrees can the chair rotate?

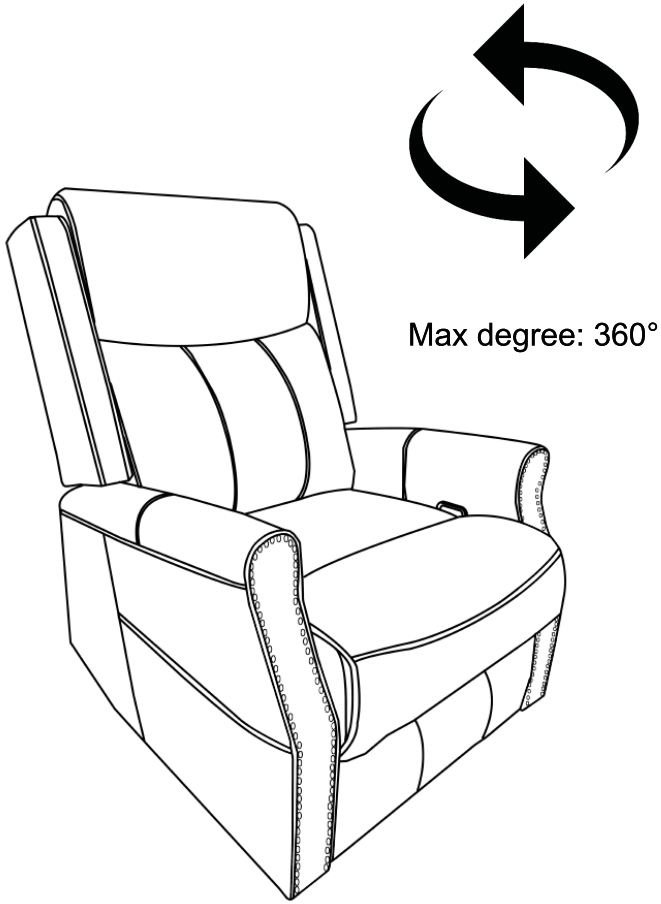

Max degree: 360°

Max degree: 30°

How to get footrest latch down?

1.Sit on the chair (not recline), backrest will be back.

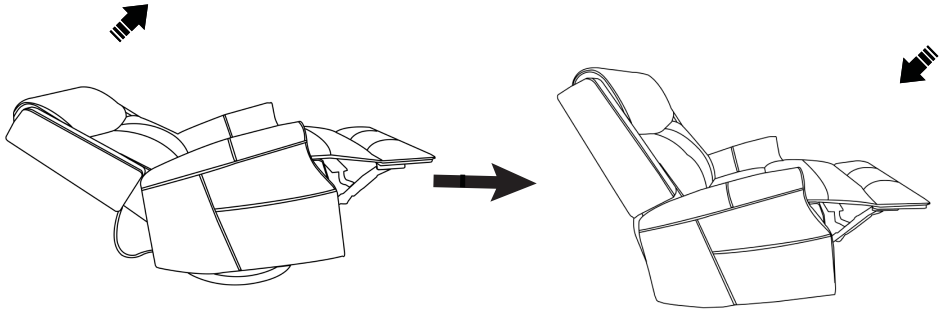

2.Press the bottom of footrest with some strength (with feet) , try some times to get footrest latch down

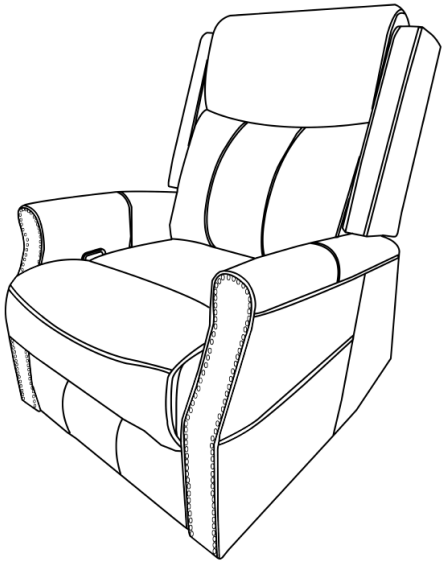

STEP 2

Insert chair back(B) to the chair base(A), make sure the slots on the back fully assembled to the bottom part.

Insert ear(D) to the back(B),make sure the slots on the ears fully assembled to the backrest

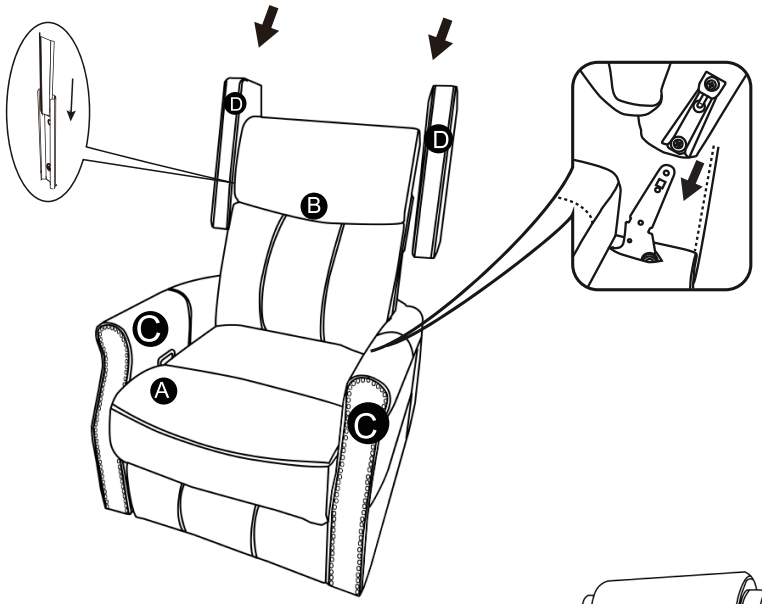

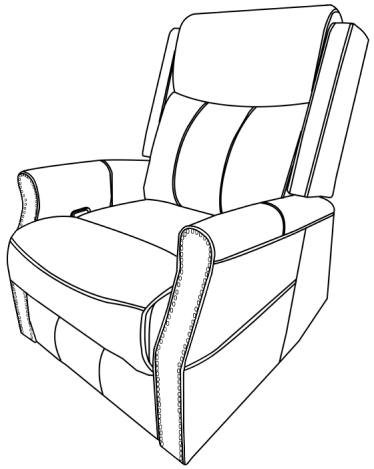

STEP 3

No.1 and No.2 wire connect with the backrest and chair base.
No.3 wire connects with backrest and power cord(E).
No.4 wire connects with backrest and remote control(F).

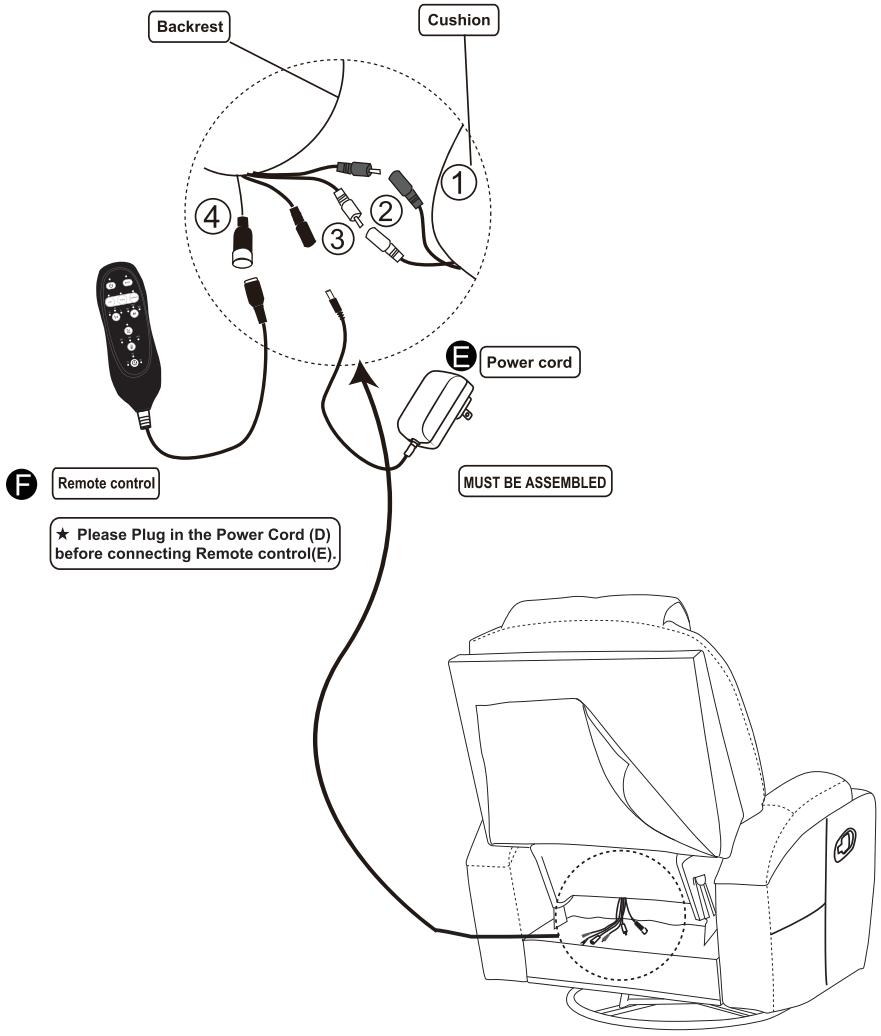

How to recline?

1. Pull the handle on the right side to release footrest.

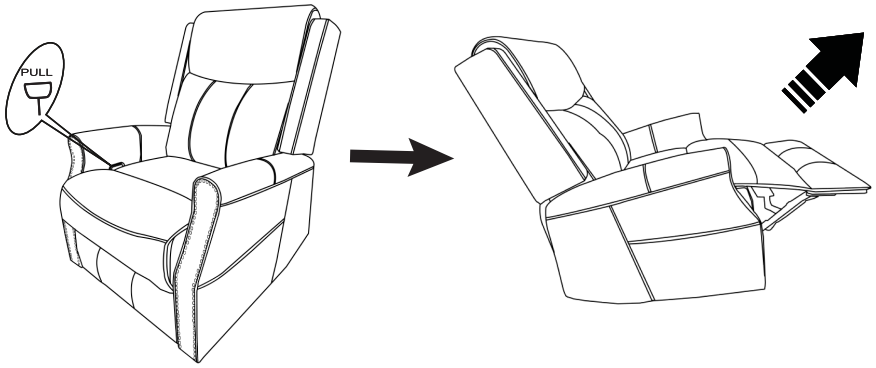

2. Sit deeper on the chair, put hands on armrests, lie down and use both hands and back strength to recline.

