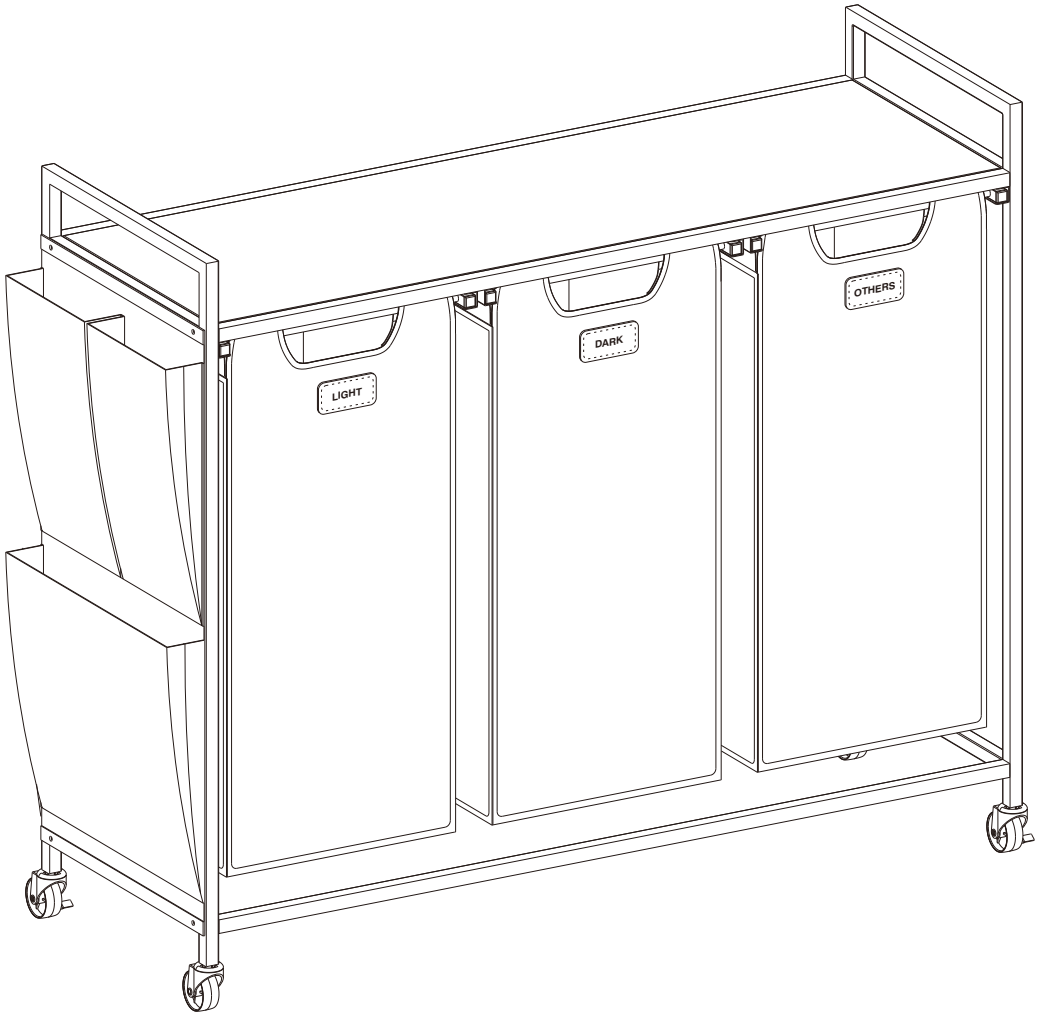
LIGHT
DARK
OTHERS

A × 1

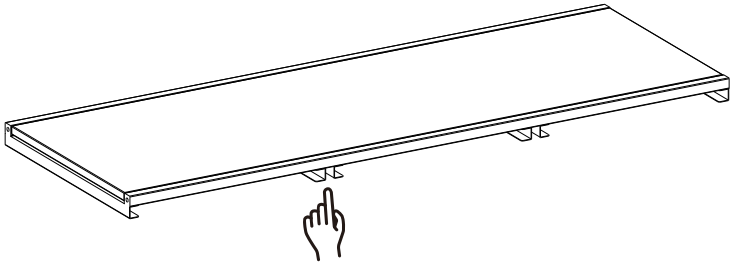

B × 3

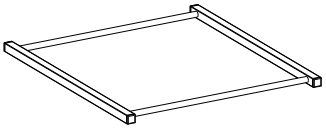

C × 2



D × 1

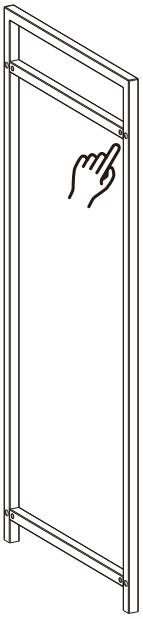

E × 1

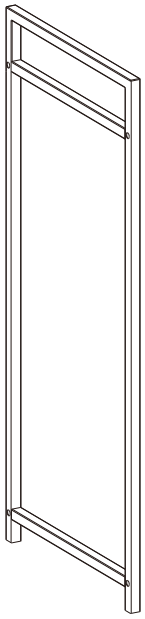

F × 3

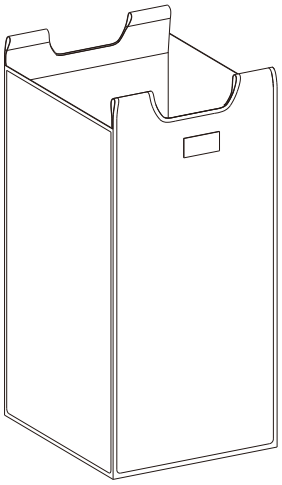

G × 1

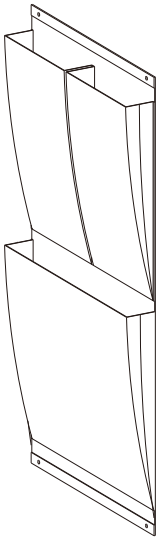

❶ × 8

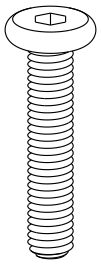

❷ × 4

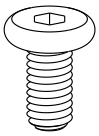

❸ × 4

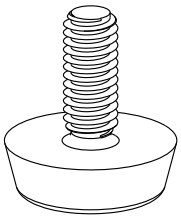

❹ × 1

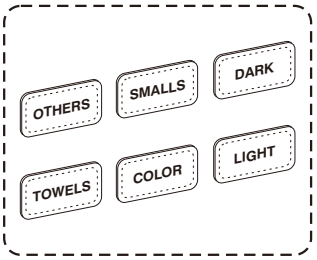

❺ × 2

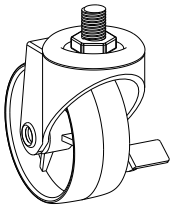

❻ × 2

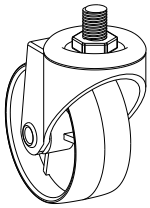

❼ × 1

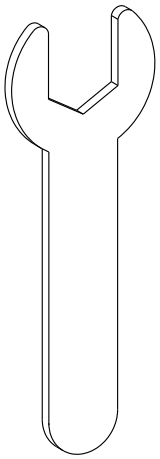

❽ × 1



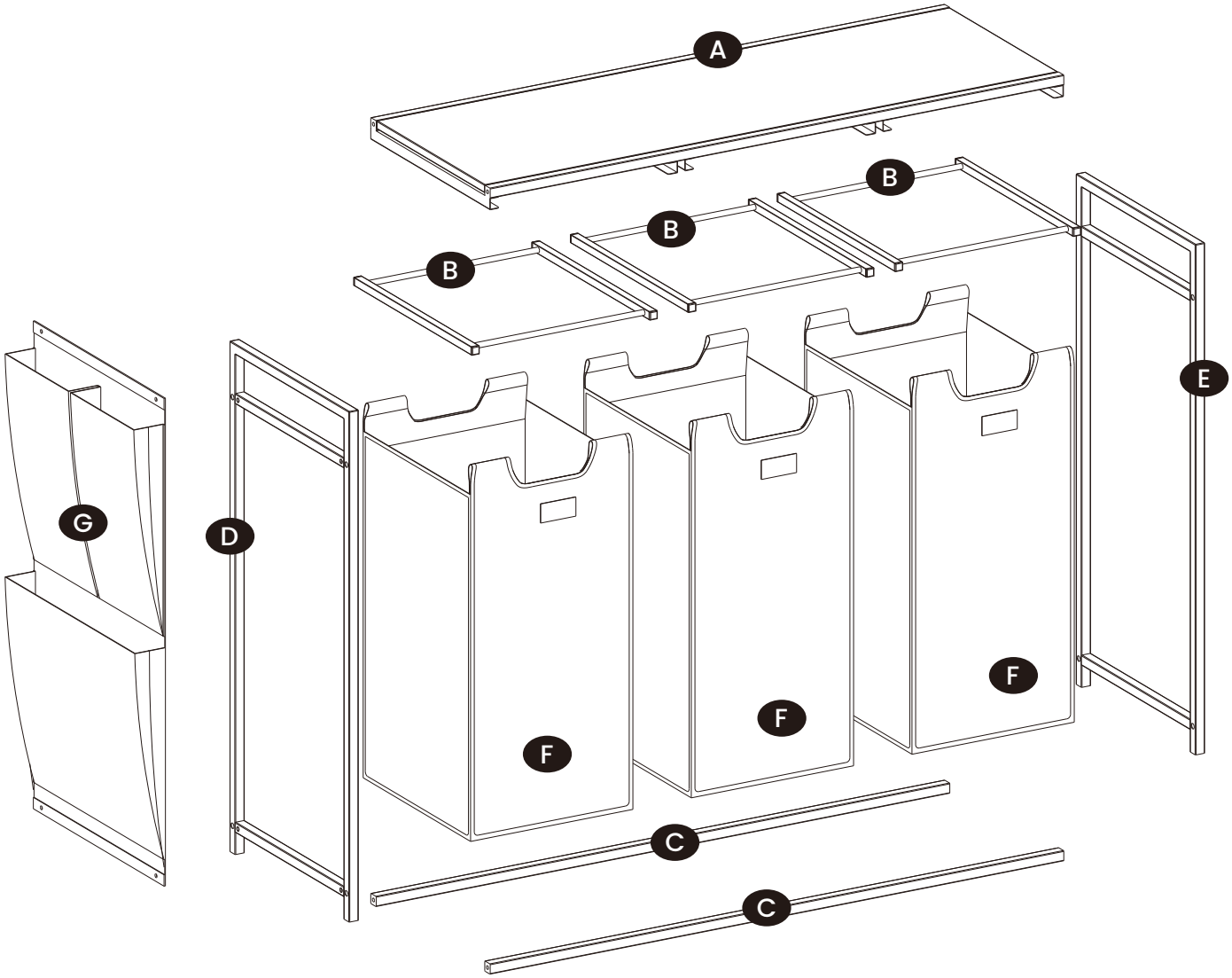
A
B
B
B
E
G
D
F
F
F
C
C

1

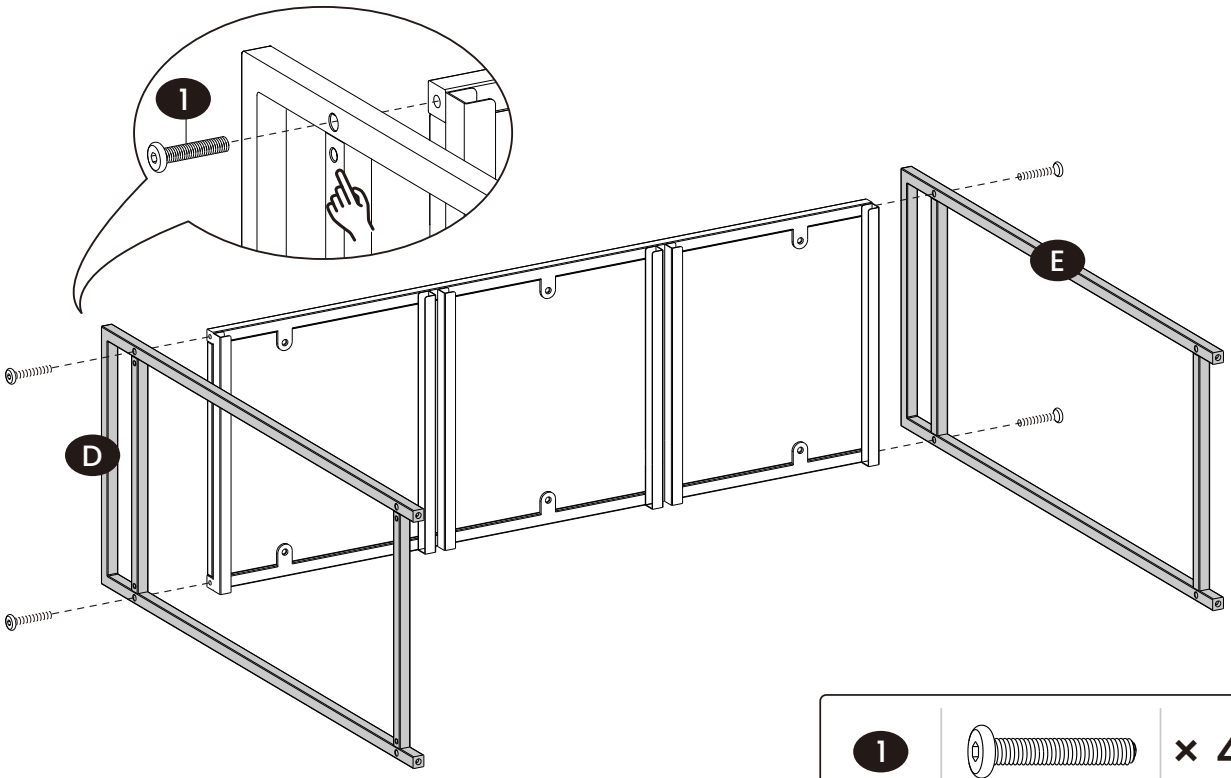

2

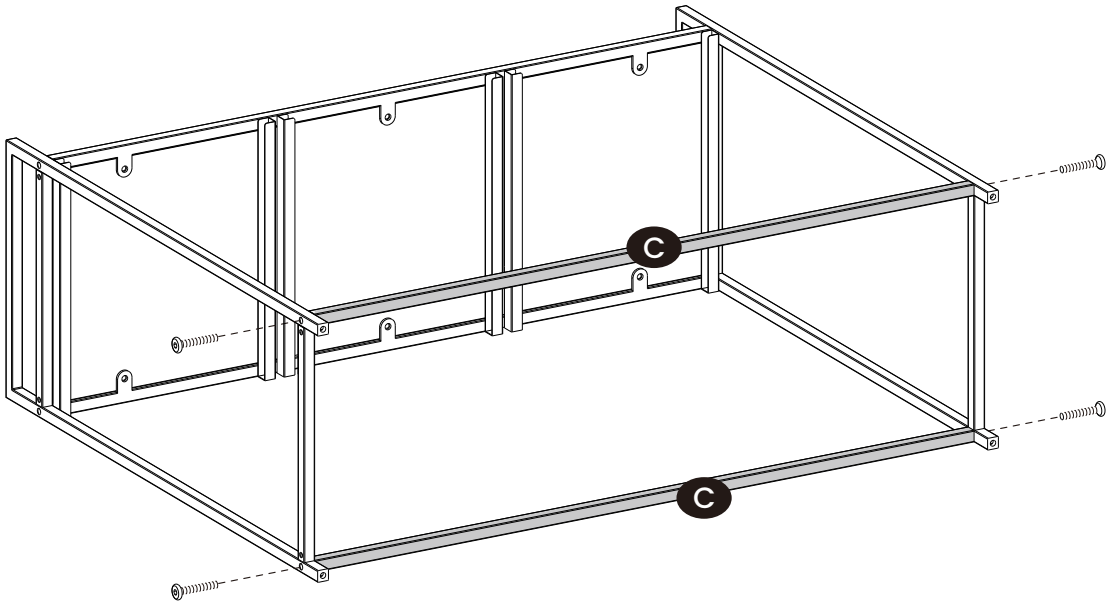

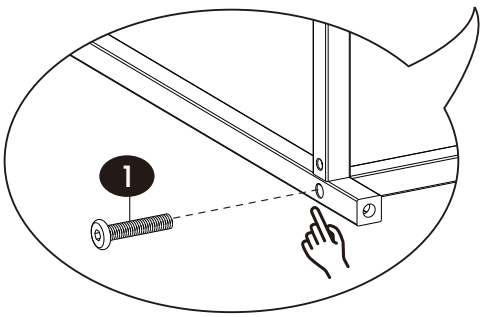

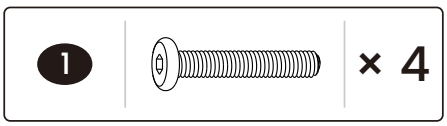

3

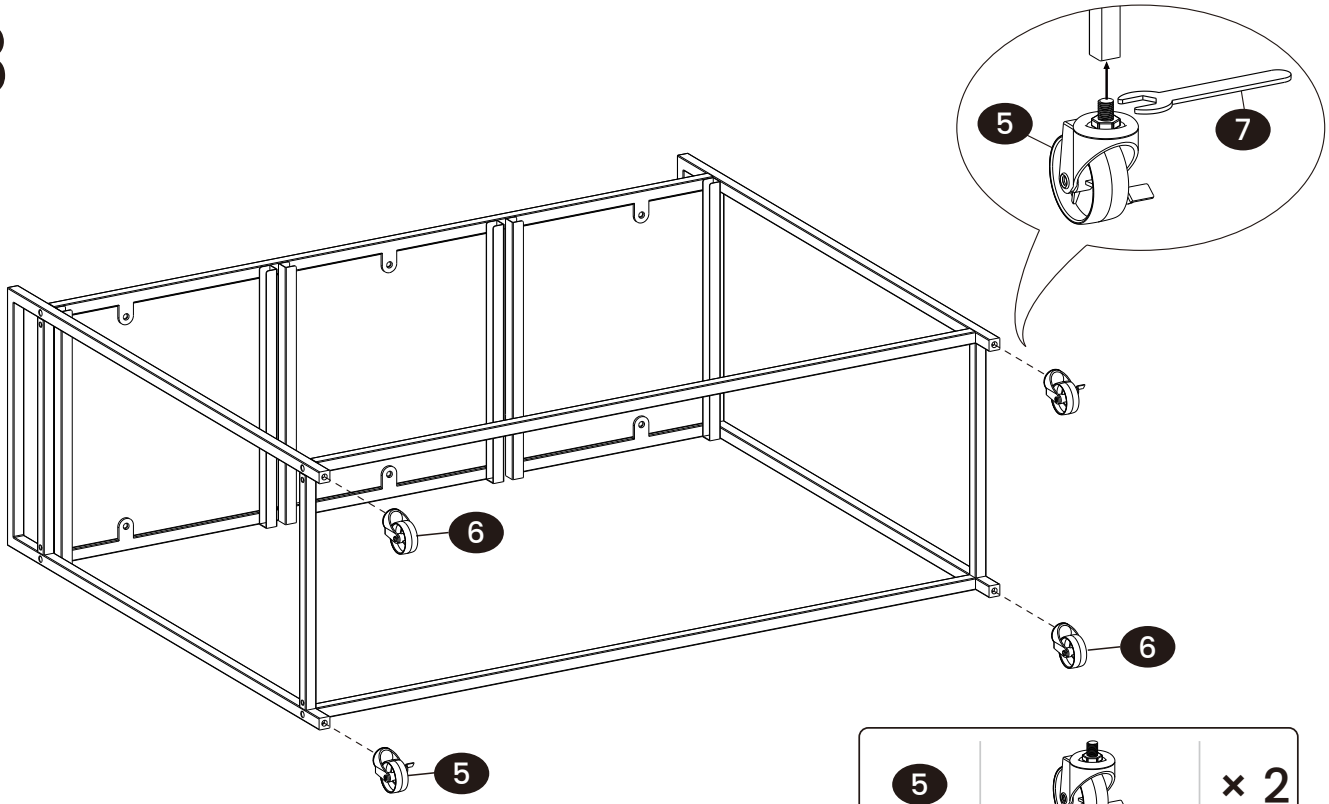

5		× 2
6		× 2

OR

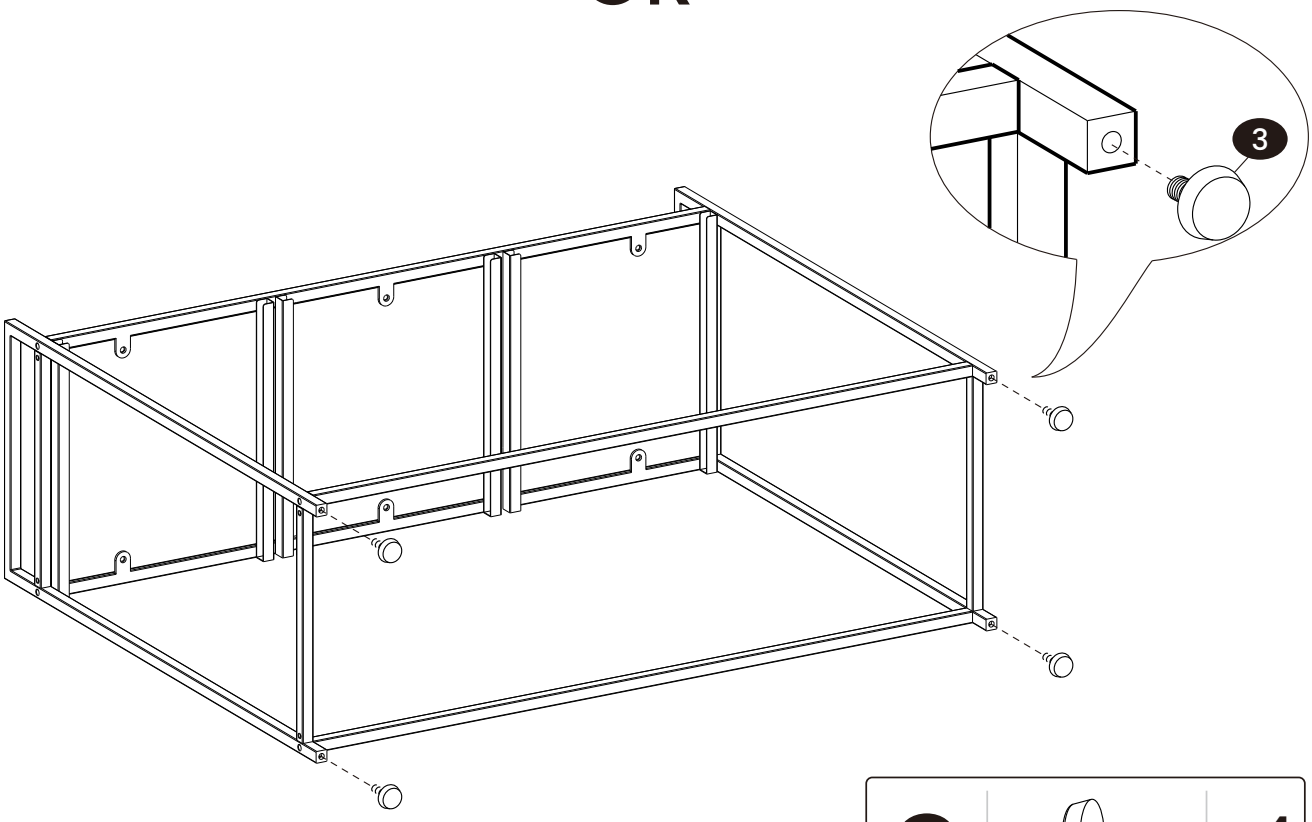

3		× 4

4

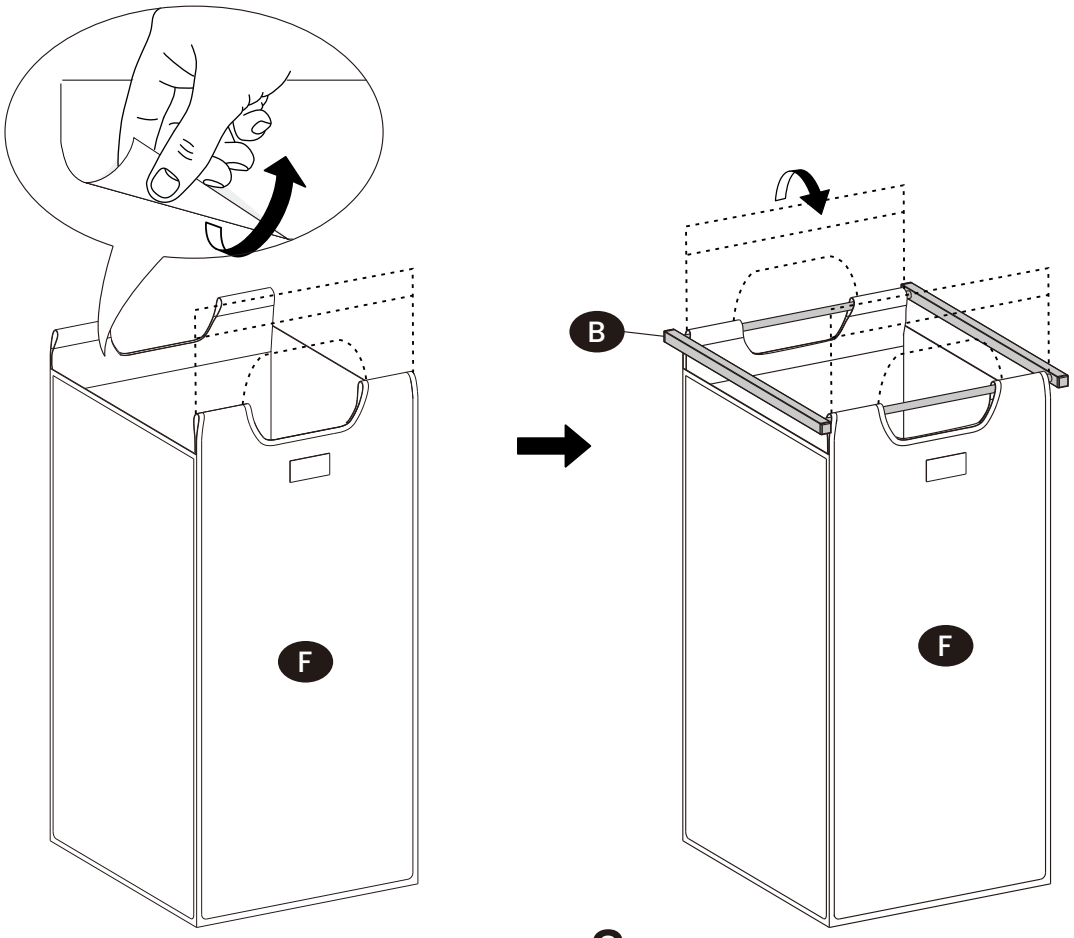
B
F
F

× 3

5

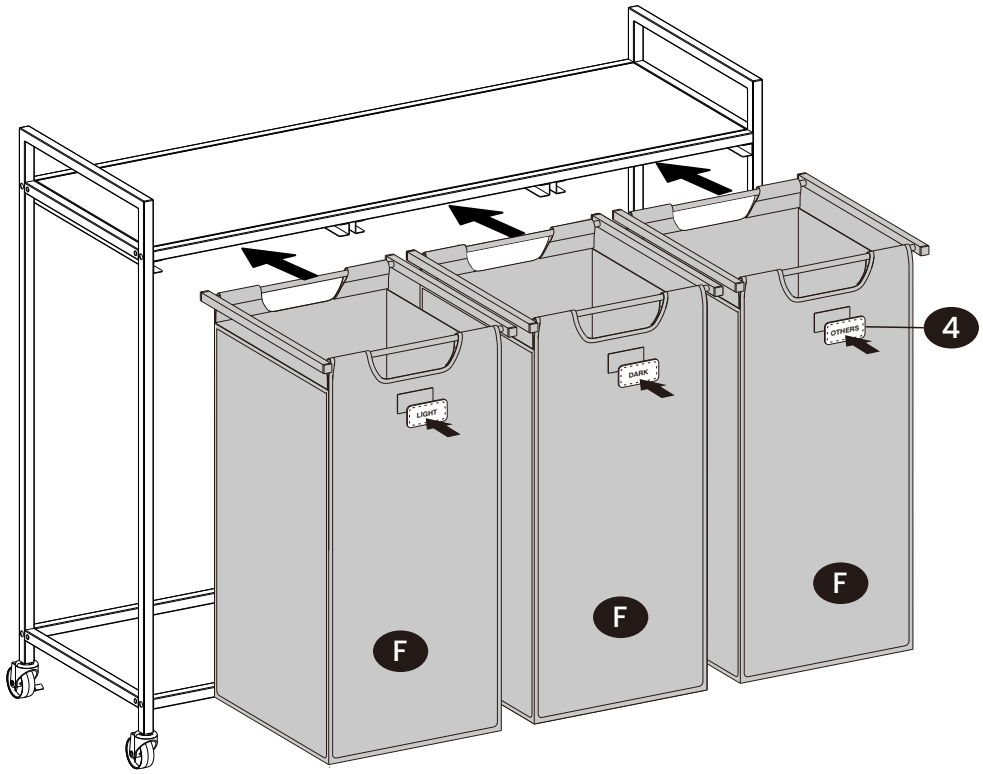
LIGHT
DARK
OTHERS
4
F
F
F

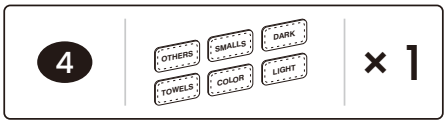
4
OTHERS
SMALLS
DARK
TOWELS
COLOR
LIGHT
× 1

6

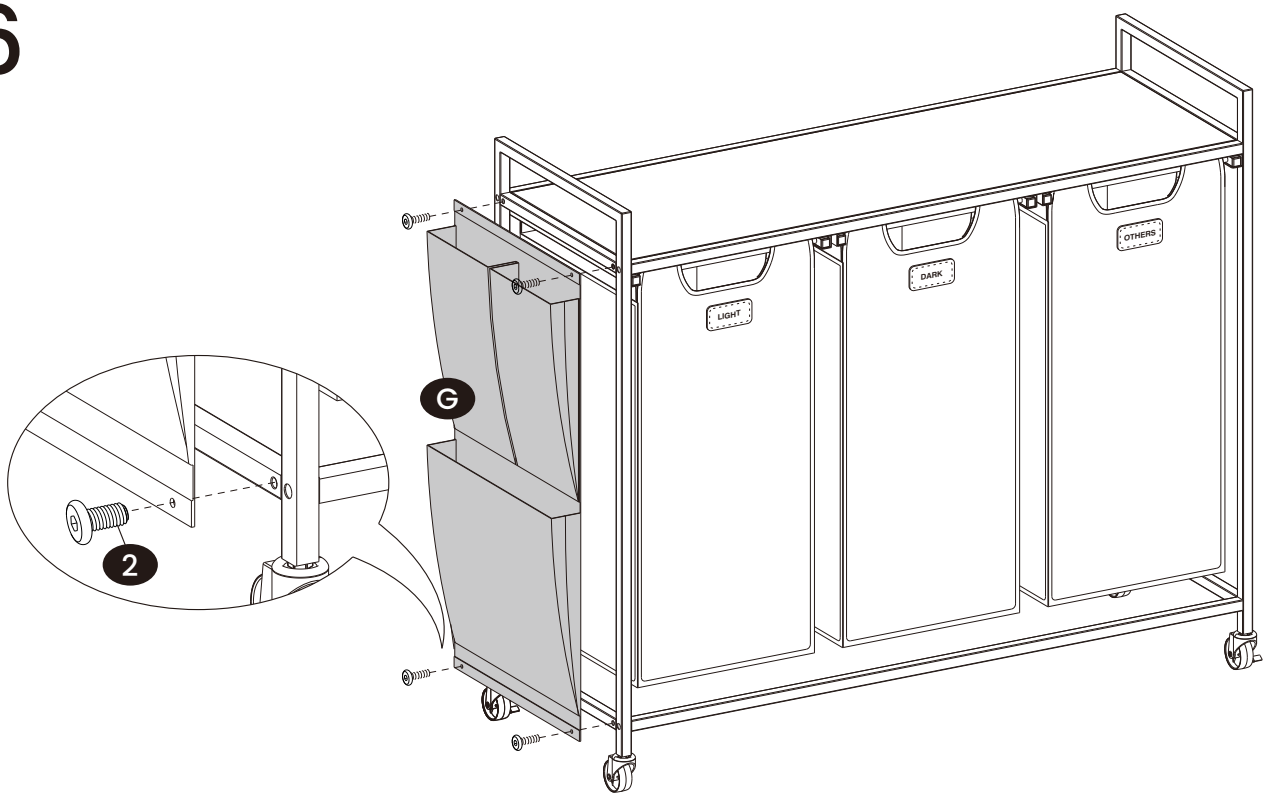

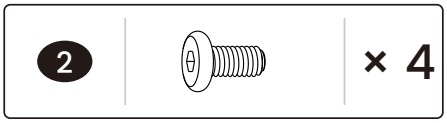

7

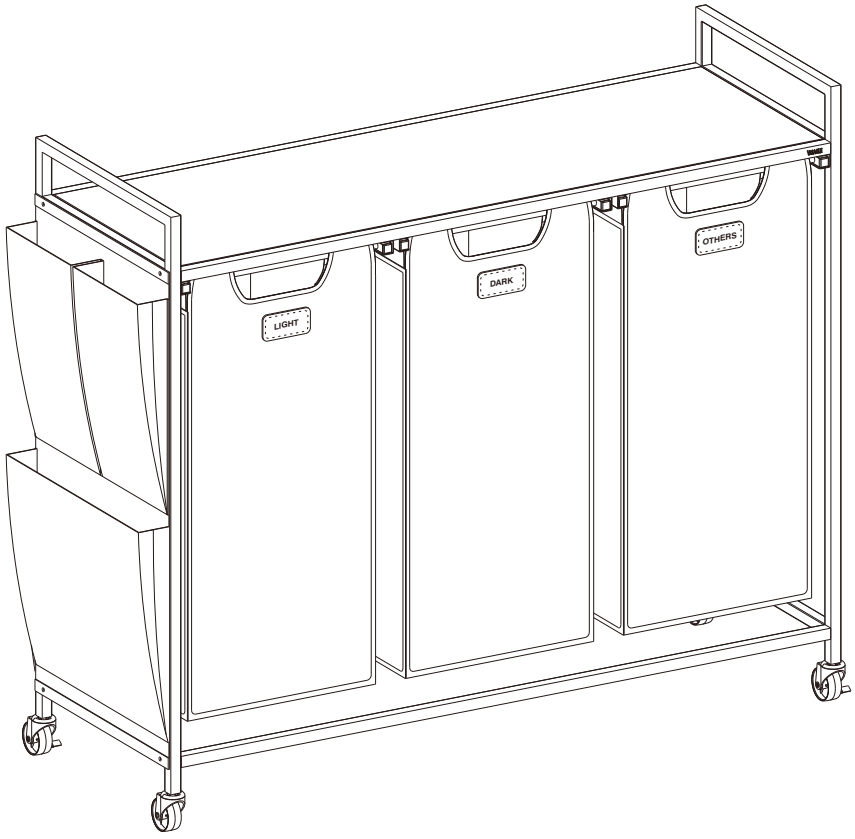

OR

