Wooden Wine Shelf

Assembly Instructions - Please keep for future reference

SKU: N728P513727

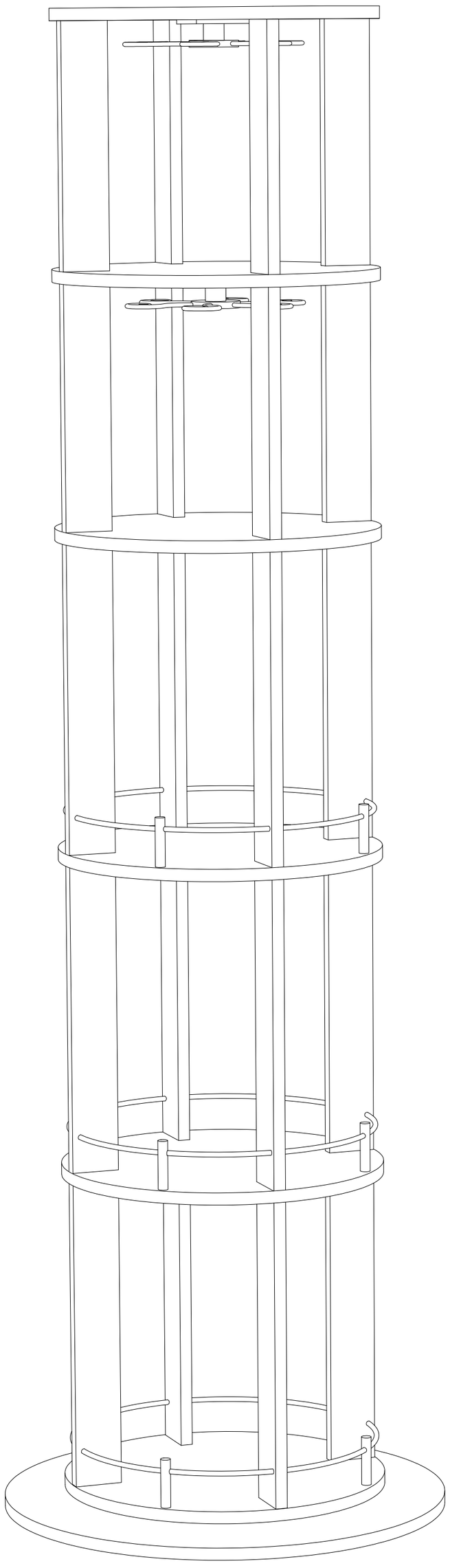

WARNING	
CSU	This product is NOT a Clothing Storage Unit (csu). DO NOT use it for clothing storage. Improper use may cause furniture tipover.

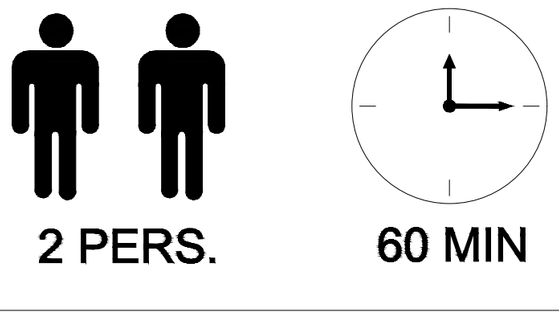

Important – Please read these instructions fully before starting assembly

Safety and Care Advice

Important – Please read these instructions fully before starting assembly

• Check you have all the components and tools listed on the following pages.

• Remove all fittings from the plastic bags and separate them into their groups.

• Keep children and animals away from the work area, small parts could choke if swallowed.

• Make sure you have enough space to layout the parts before starting.

• During assembly do not stand or put weight on the product, this could cause damage.

• Assemble the item as close to its final position (in the same room) as possible.

• Assemble on a soft level surface to avoid damaging the unit or your floor.

• Parts of the assembly will be easier with 2 people.

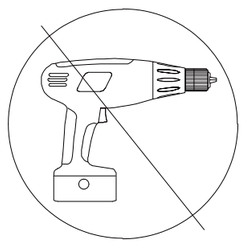

• To reduce the likelihood of damaging your product please ensure that your power drill is set on a low torque setting.

Care and maintenance

• Only clean using a damp cloth and mild detergent, do no use bleach or abrasive cleaners.

• From time to time check that there are no loose screws on this unit.

• This product should not be discarded with household waste. Take to your local authority waste disposal centre.

Handy Hints

• Assemble all parts and bolts loosely during assembly, only once the product is complete should you fully tighten the bolts

• Regularly check and ensure That all bolts and fittings are tightend properly.

WARNING
In order to help prevent overturning – please follow these instructions

To help prevent product toppling over please follow the below steps:-

Use the anti tip stap or wall fixing method provided (if applicable)
Do not allow children to climb or hang on the furniture
Do not open more than one drawer at a time
Do not place heavy items in the top drawers
Do not place heavy items on top of the furniture, unless the furniture has been designed for this purpose

Using Camlocks

Step 1

Connect the male camlock as diected in the assembly instructions using a scewdriver.

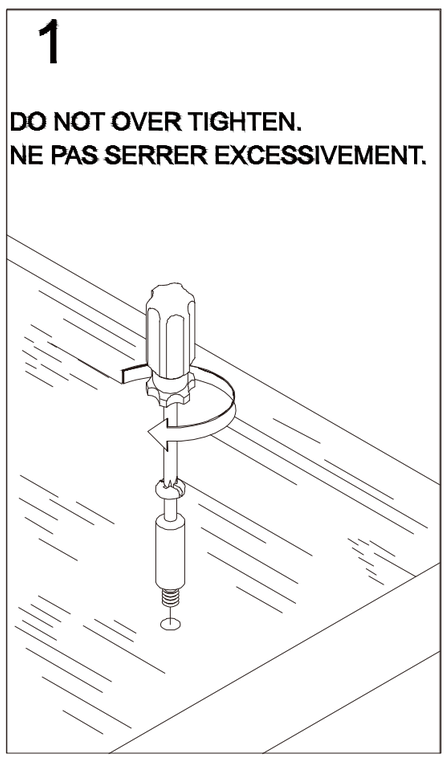

Step 2

Push the male camlock into the entry hole.

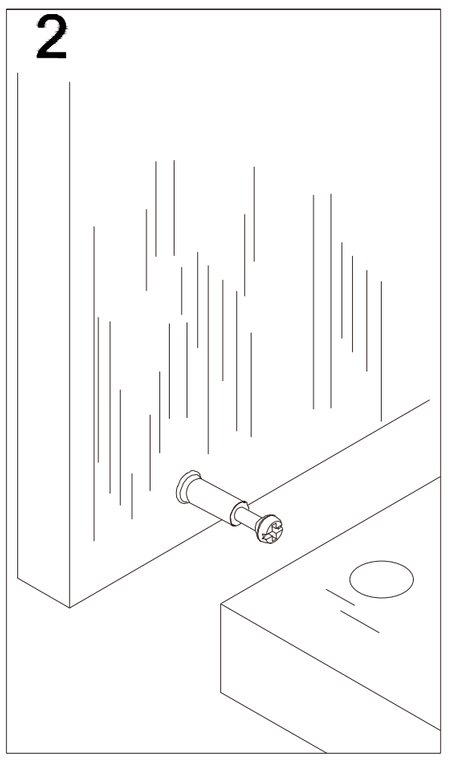

Step 3

Insert the female camlock as shown in the instruction.

Note: ensure that the arrow on the top of the camlock points towards the entry hole for the male camlock.

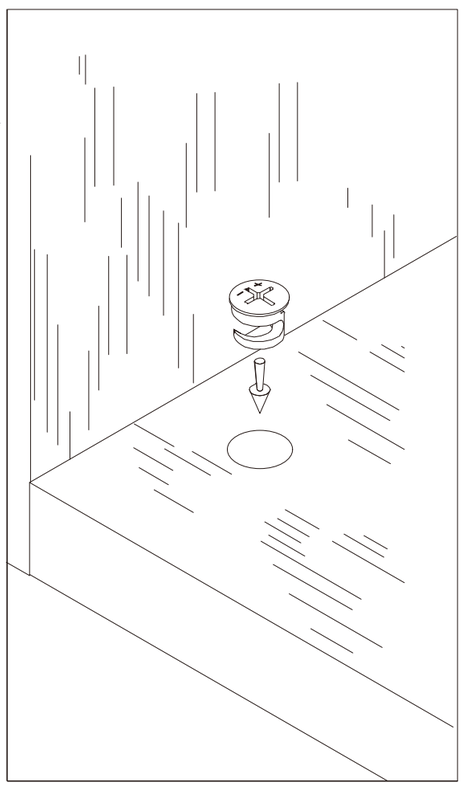

Step 4

Turn the female camlock clockwise with a screwdriver.

You should feel a click when the camlock is locked in place.

The joint is now secure.

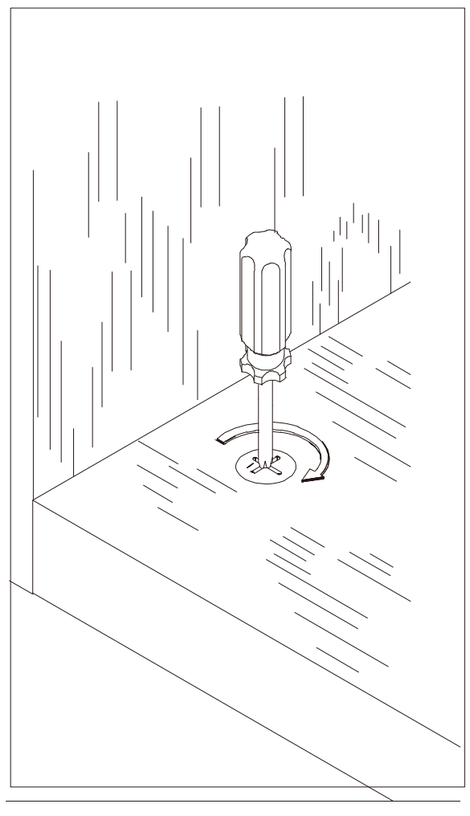

ASSEMBLY INSTRUCTIONS

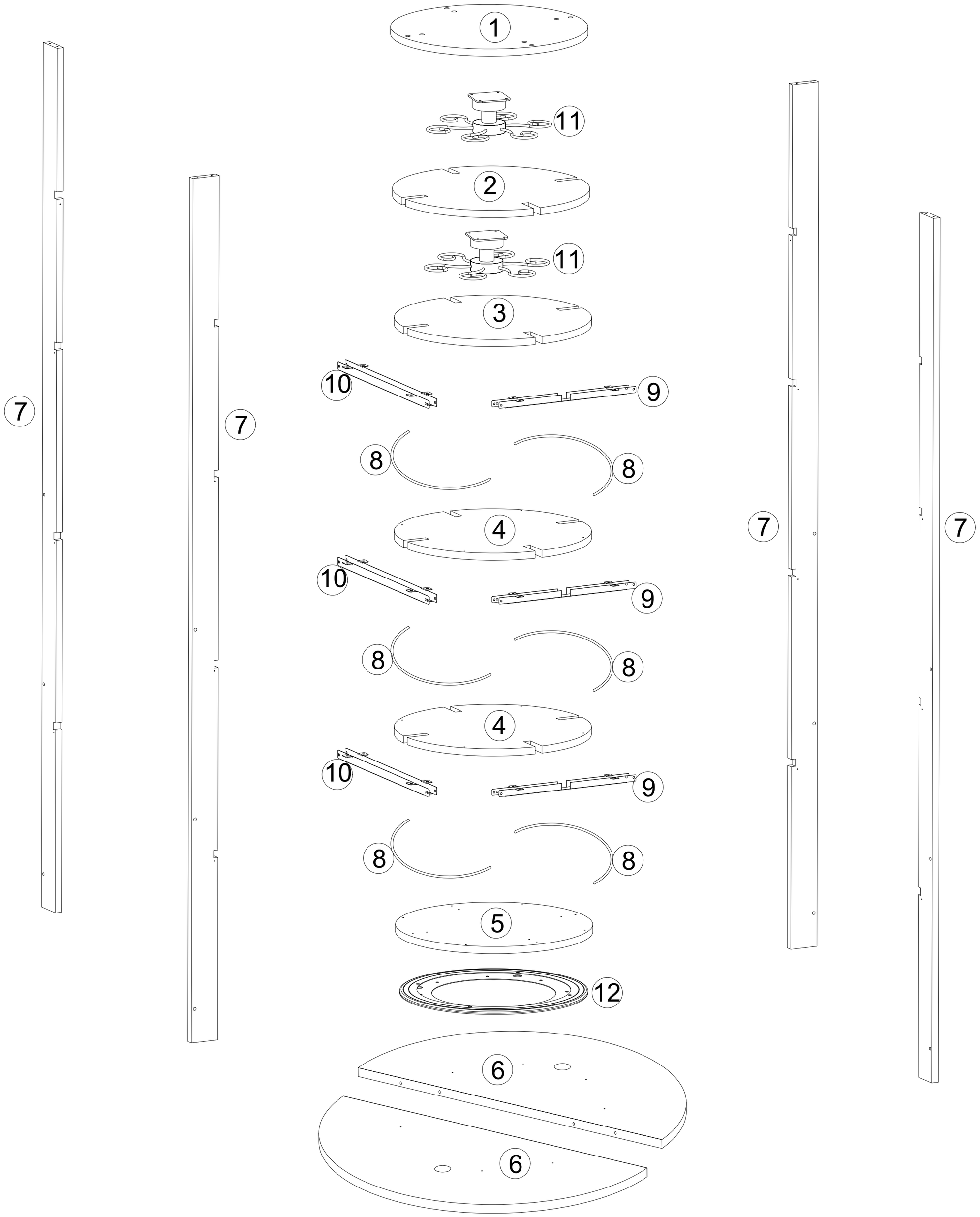

PARTS

1 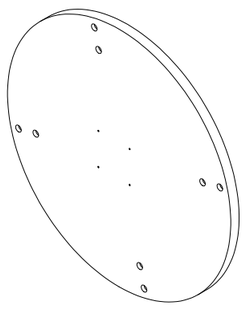 1pc	2 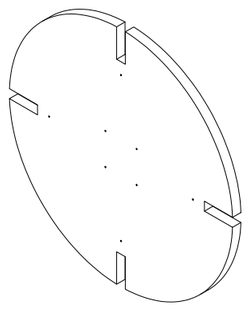 **1pc**	3 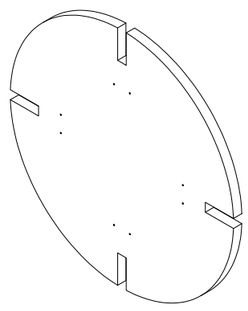 1pc	4 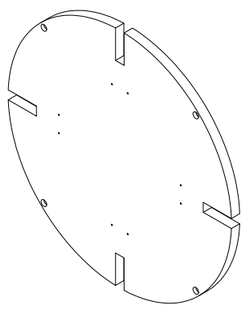 2pcs	5 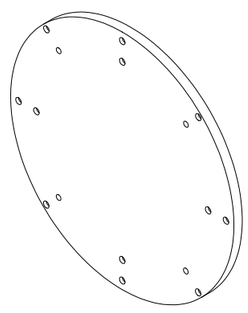 1pc
6 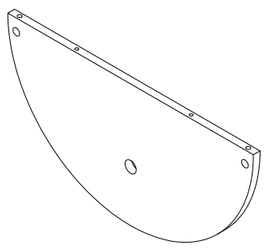 2pcs	7 4pcs	8 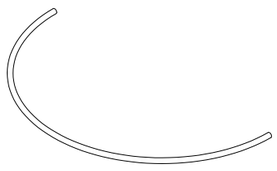 6pcs	9 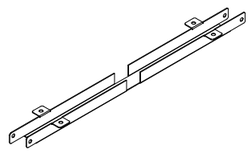 3pcs	10 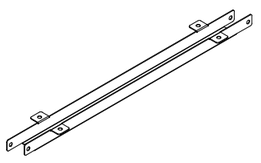 3pcs
11 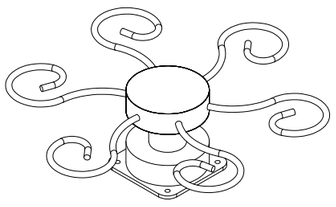 2pcs	12 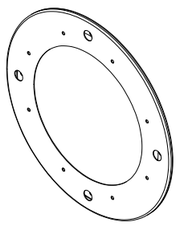 1pc			

HARDWARE

A 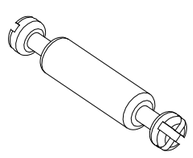 Cam Double Bolt x2	B 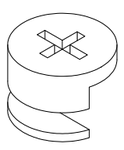 Cam Lock x4	C  12pcs	D 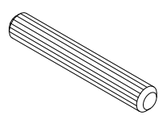 6x40mm Dowel x2	E 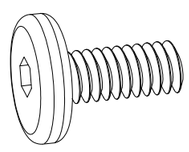 M6x12mm Bolt x4
F 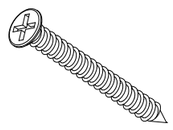 Screw 5x40 16PCS	G 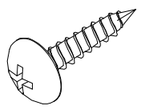 Screw 4x14 72 PCS	H 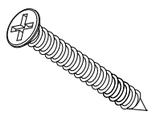 Screw 4x35 12PCS	I 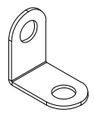 4pcs	J  **Felt Pad x** 6
K 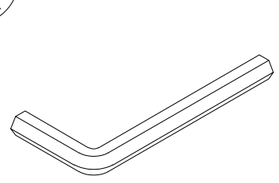 Allen key 1PC				

ASSEMBLY INSTRUCTIONS

STEP 1

A

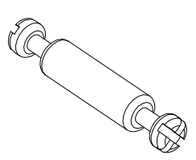

Cam Double Bolt x2

B

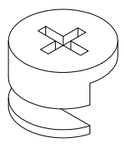

Cam Lock x4

D

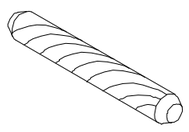

6x40mm Dowel x2

G

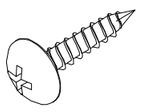

Screw 4x14 8PCS

J

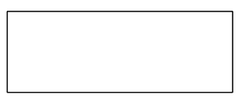

Felt Pad x6

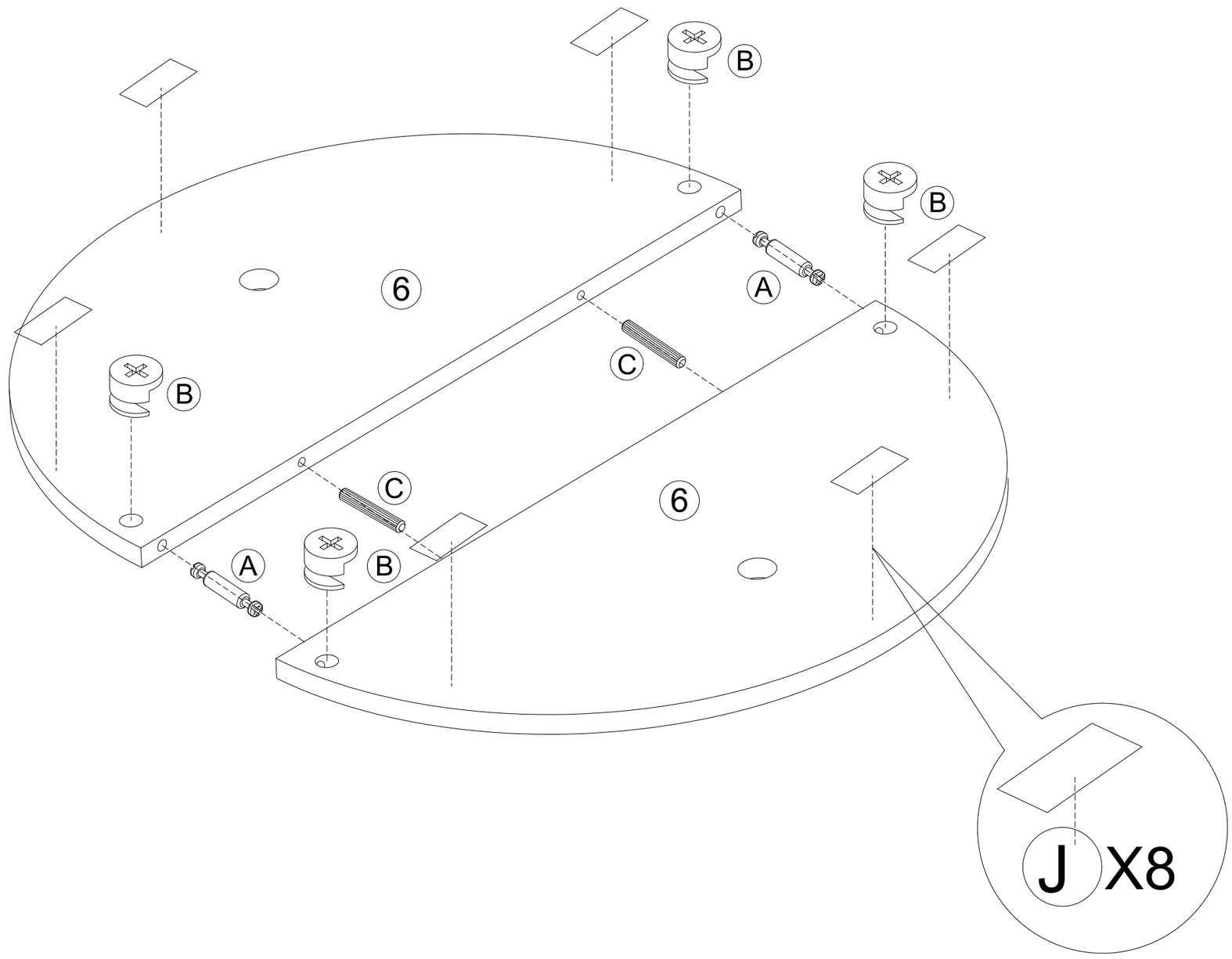

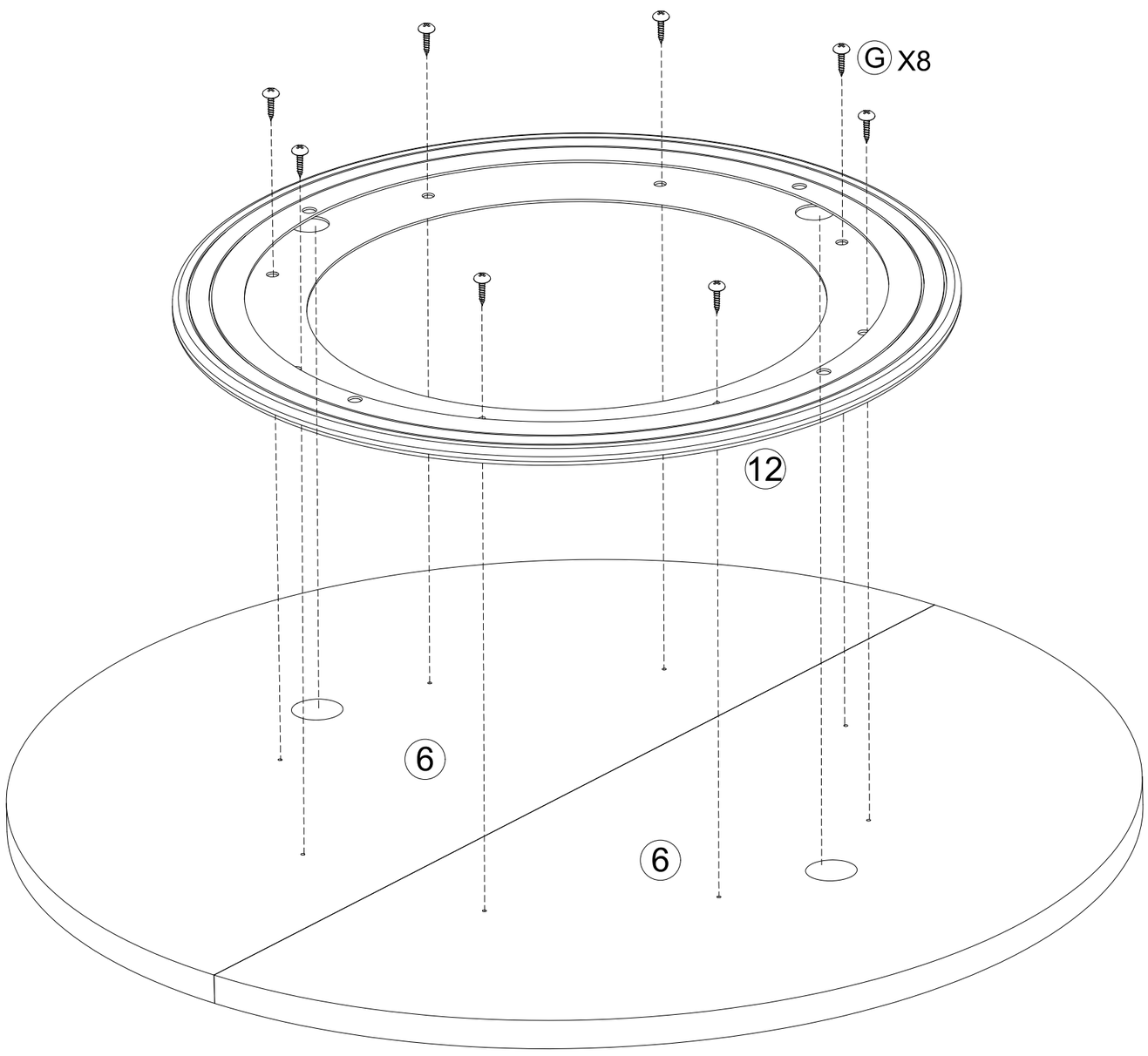

ASSEMBLY INSTRUCTIONS

STEP 2

G

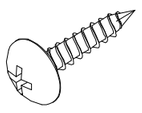

Screw 4x14 24PCS

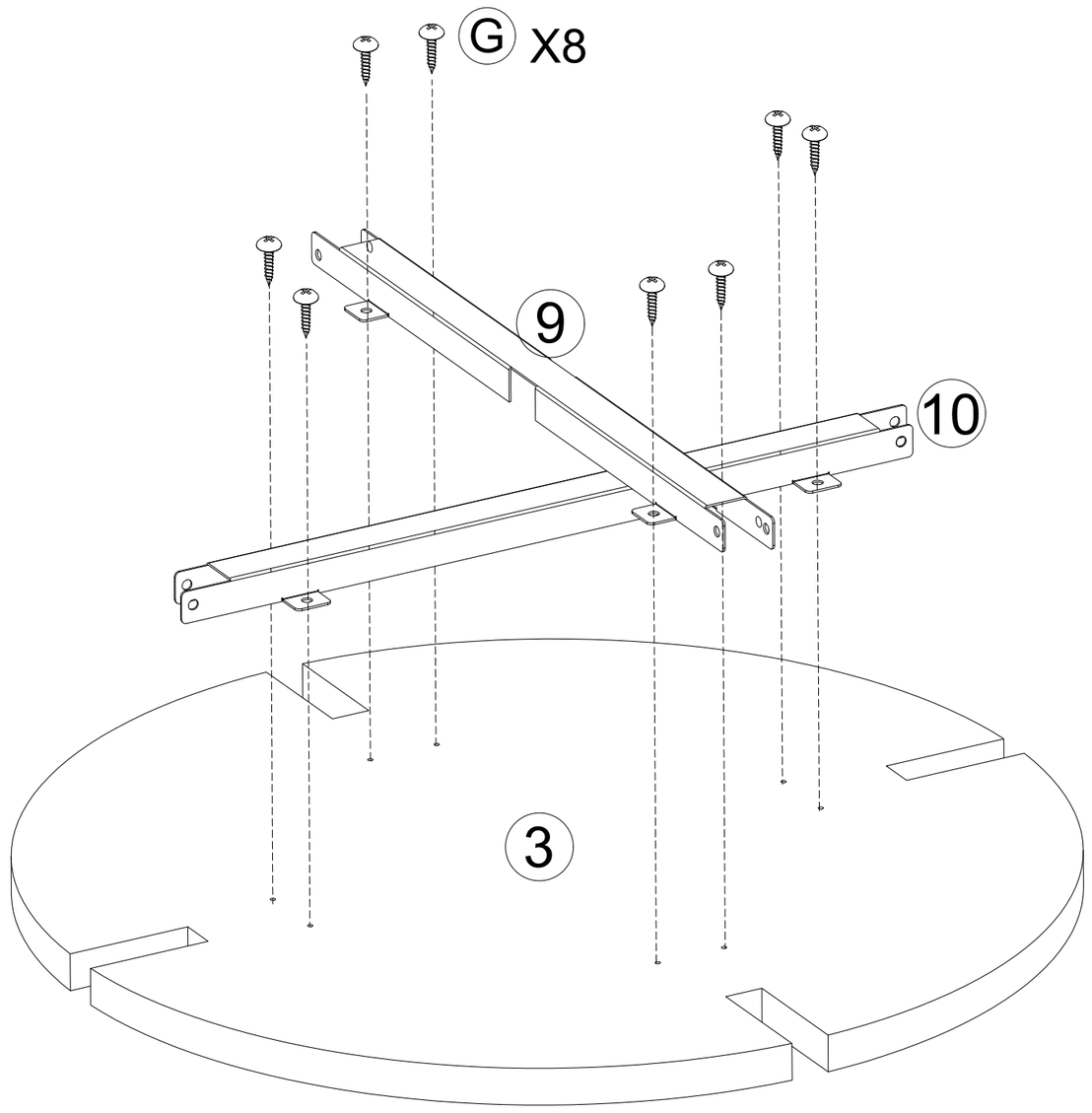

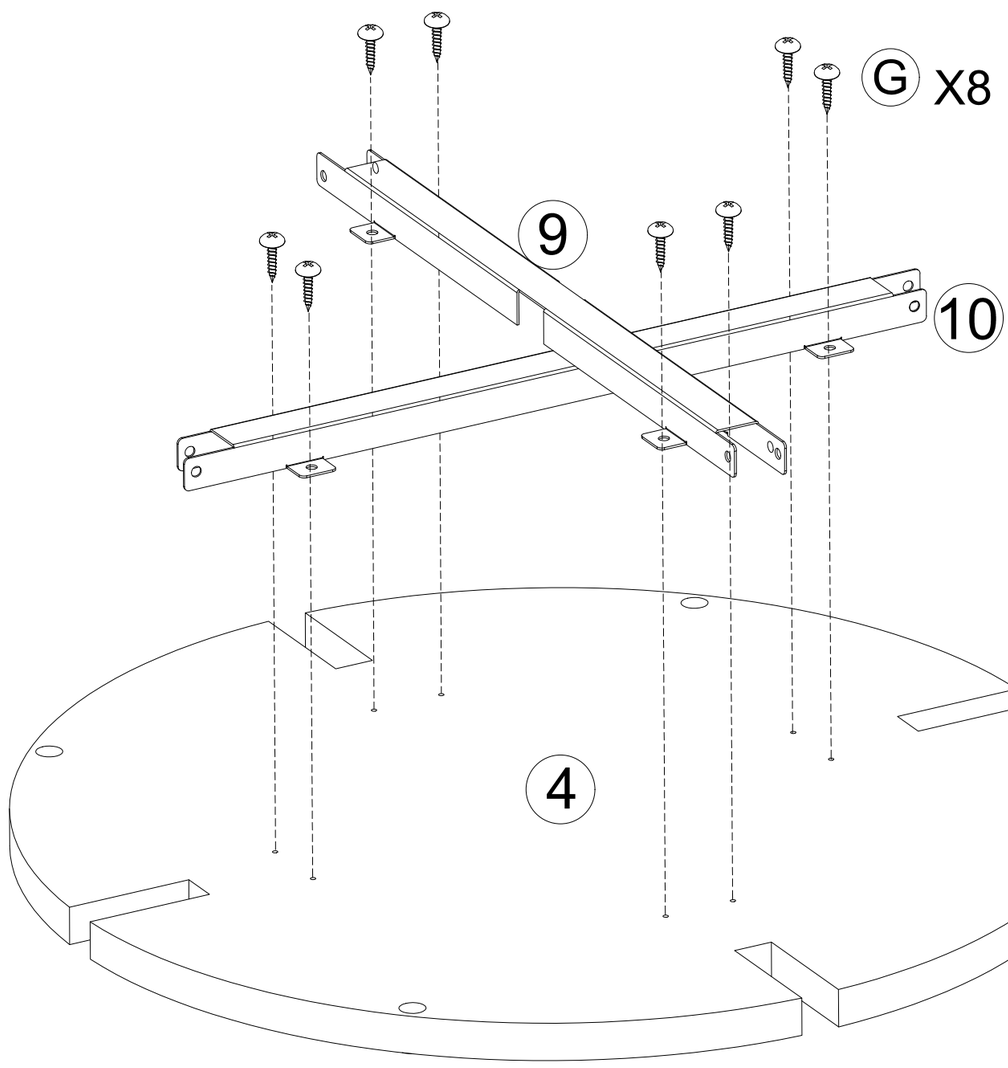

X2

STEP 3

G

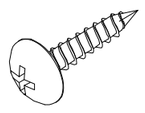

Screw 4x14 8PCS

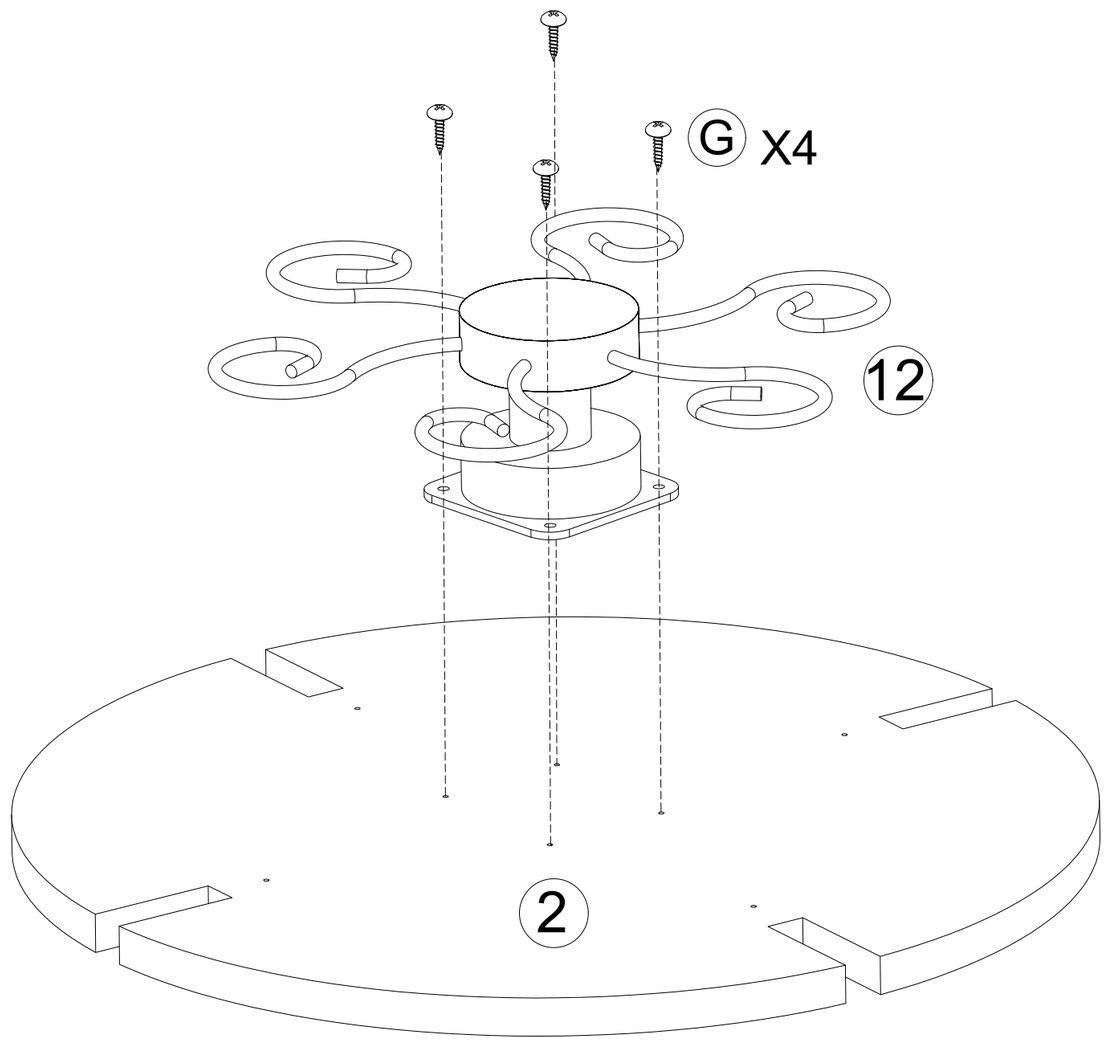

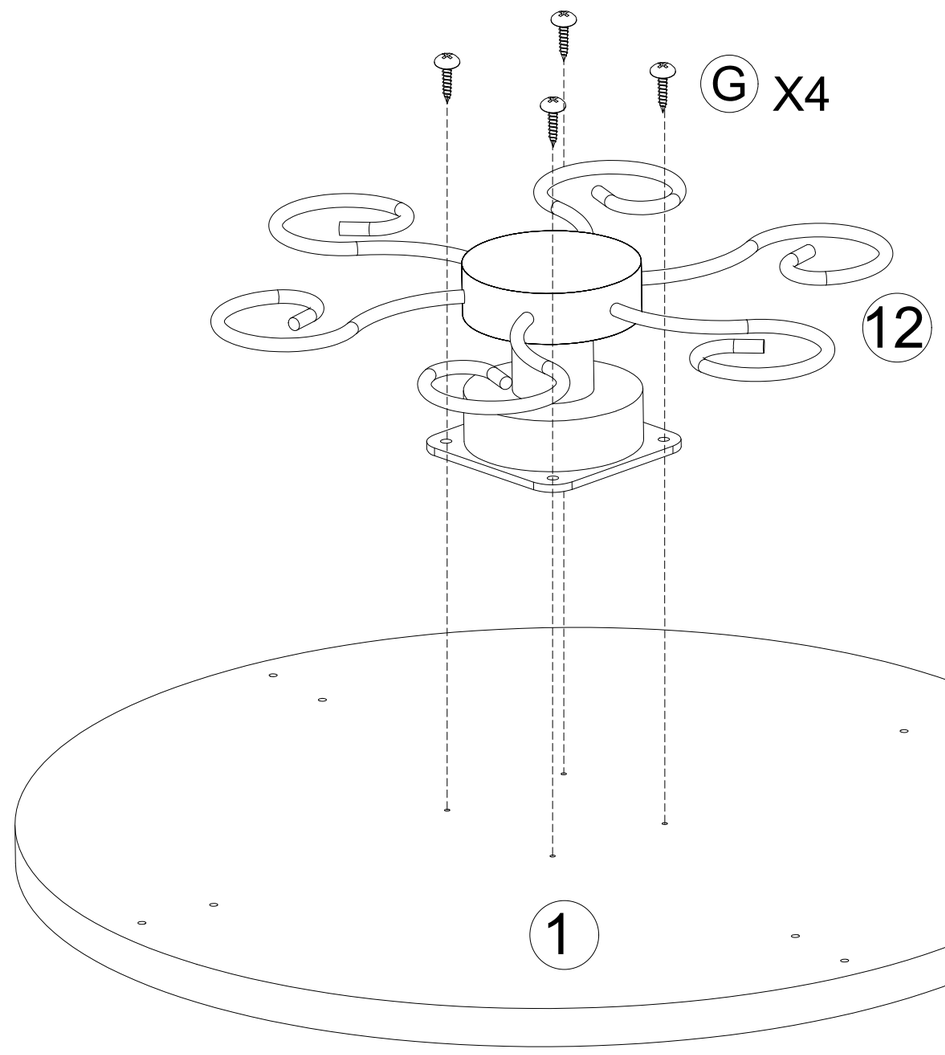

STEP 4

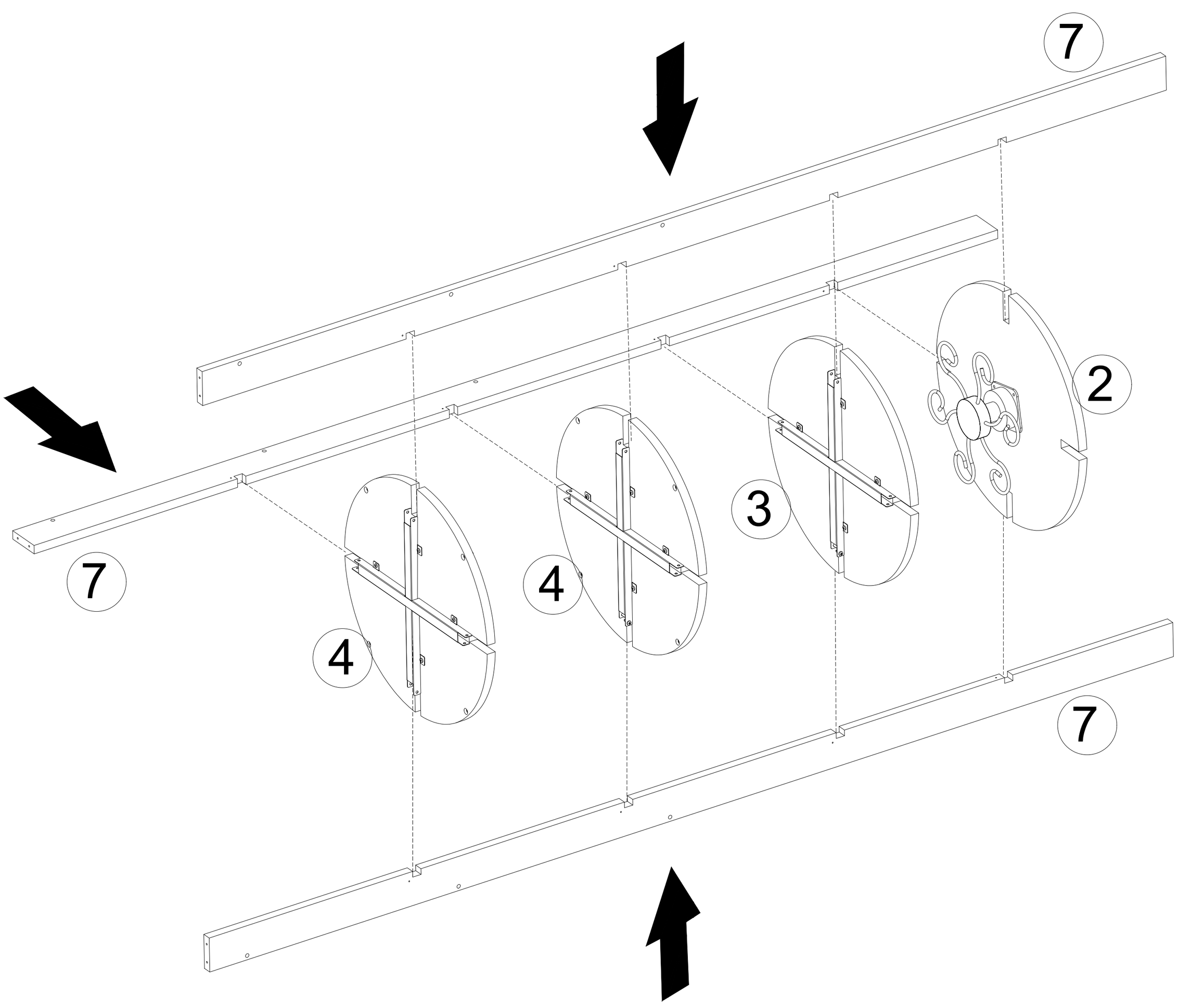

STEP 5

G

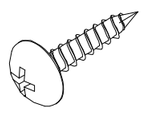

Screw 4x14 18PCS

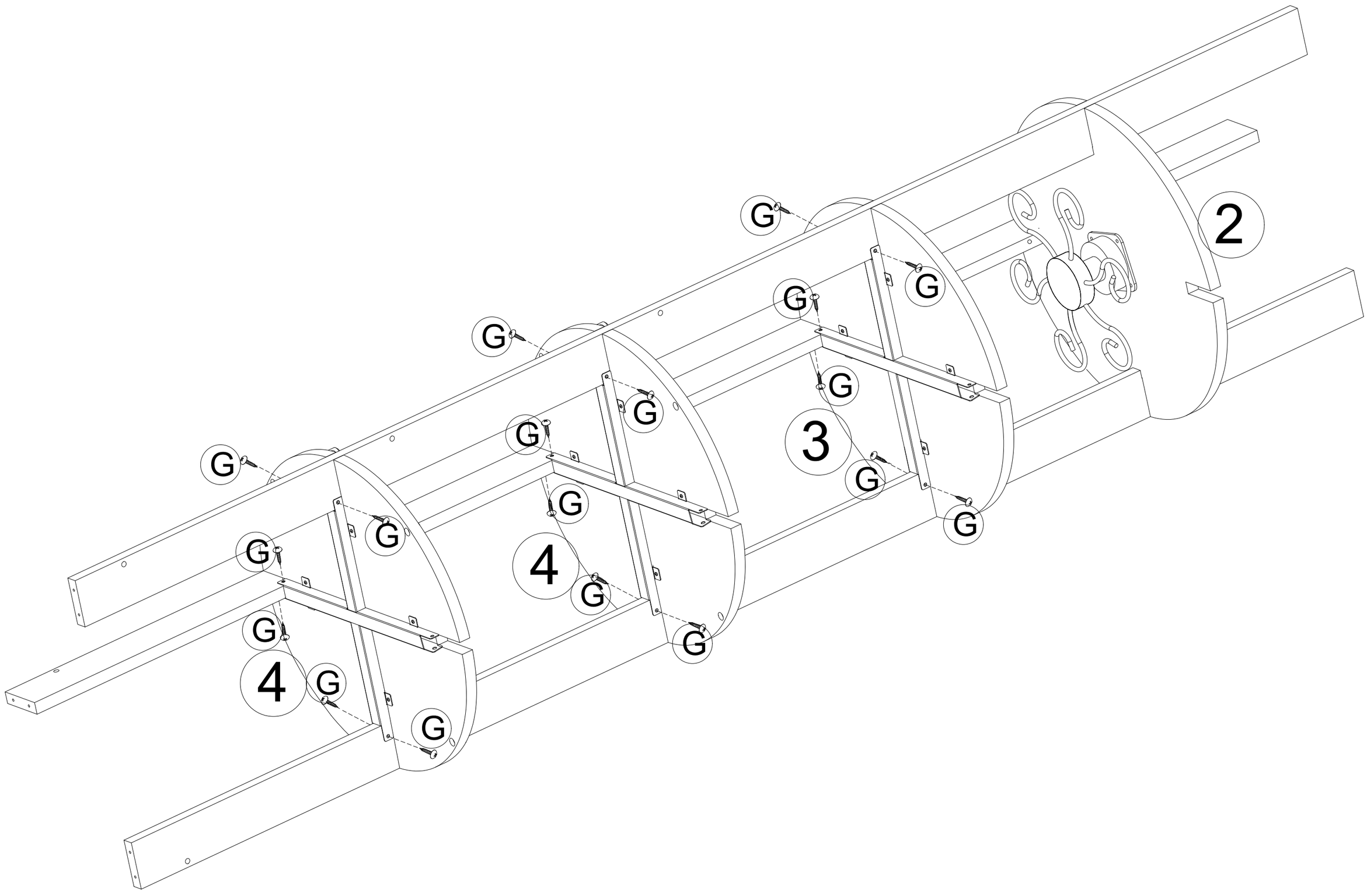

STEP 6

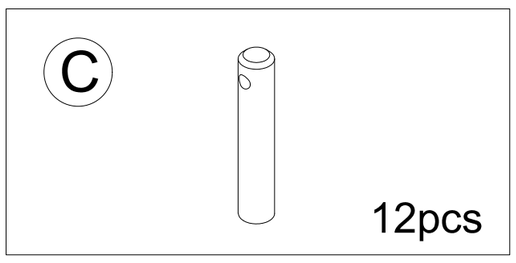

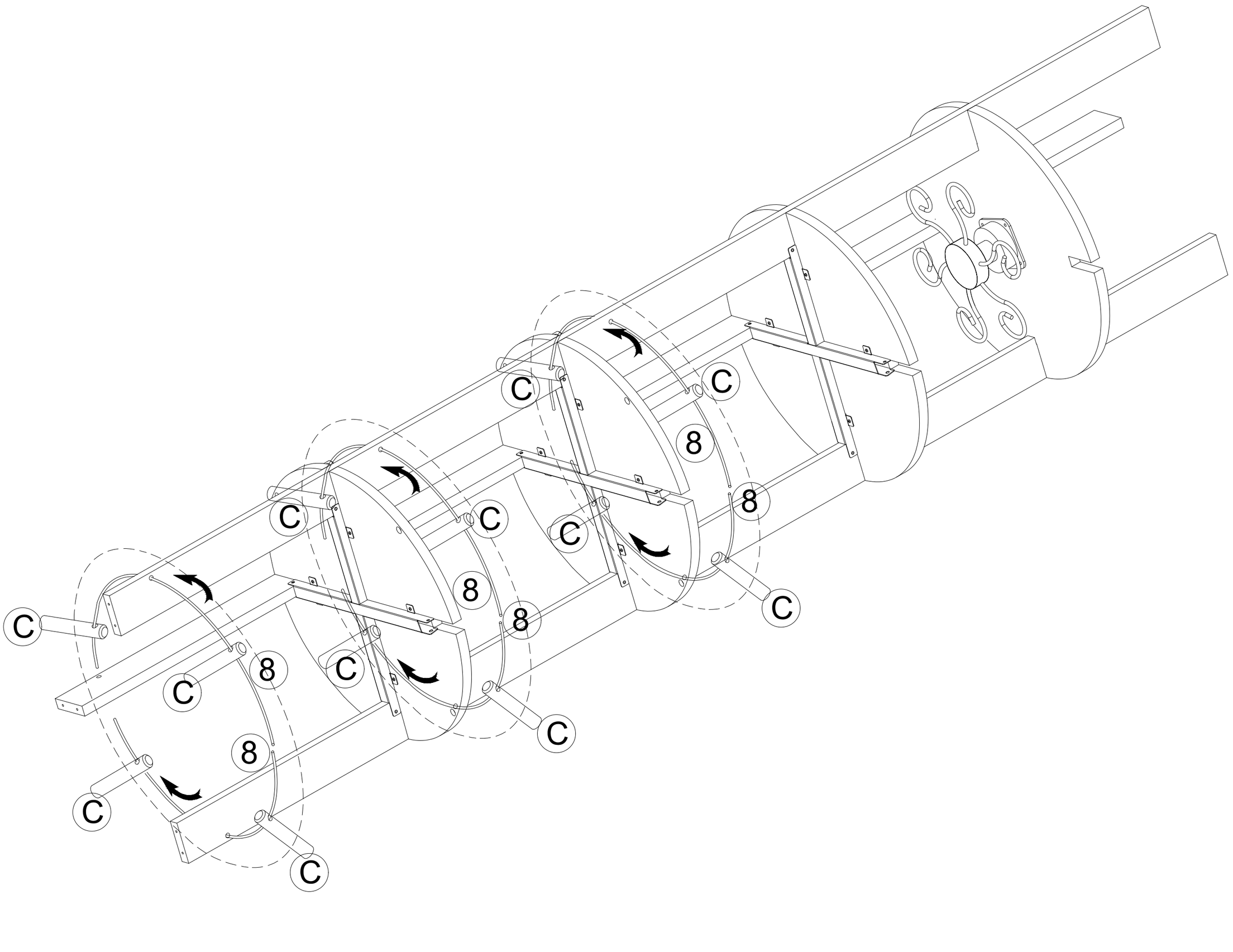

STEP 7

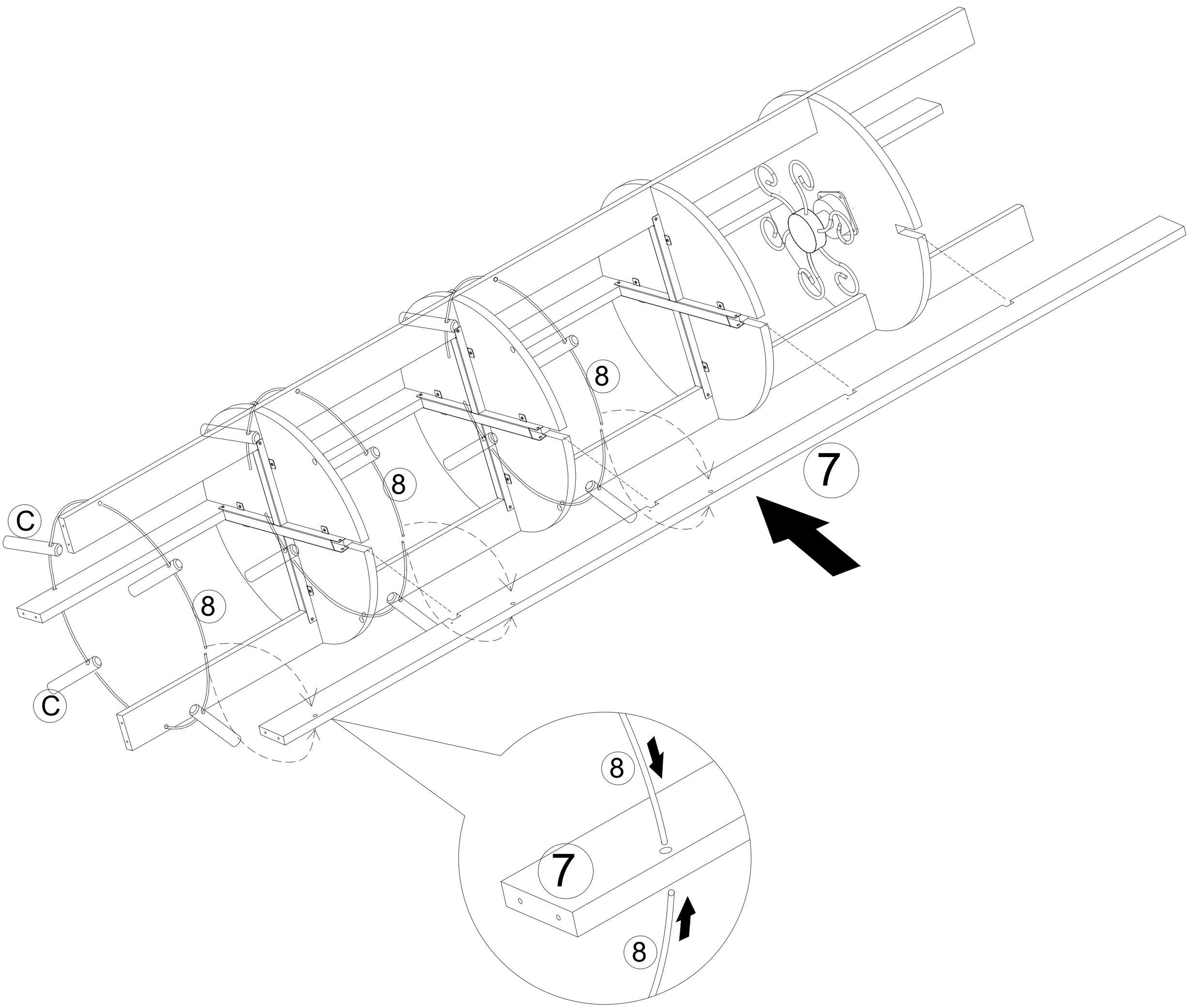

STEP 8

G 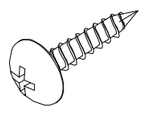	Screw 4x14 14PCS
H 	Screw 4x35 8PCS
I 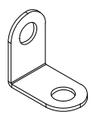	4pcs

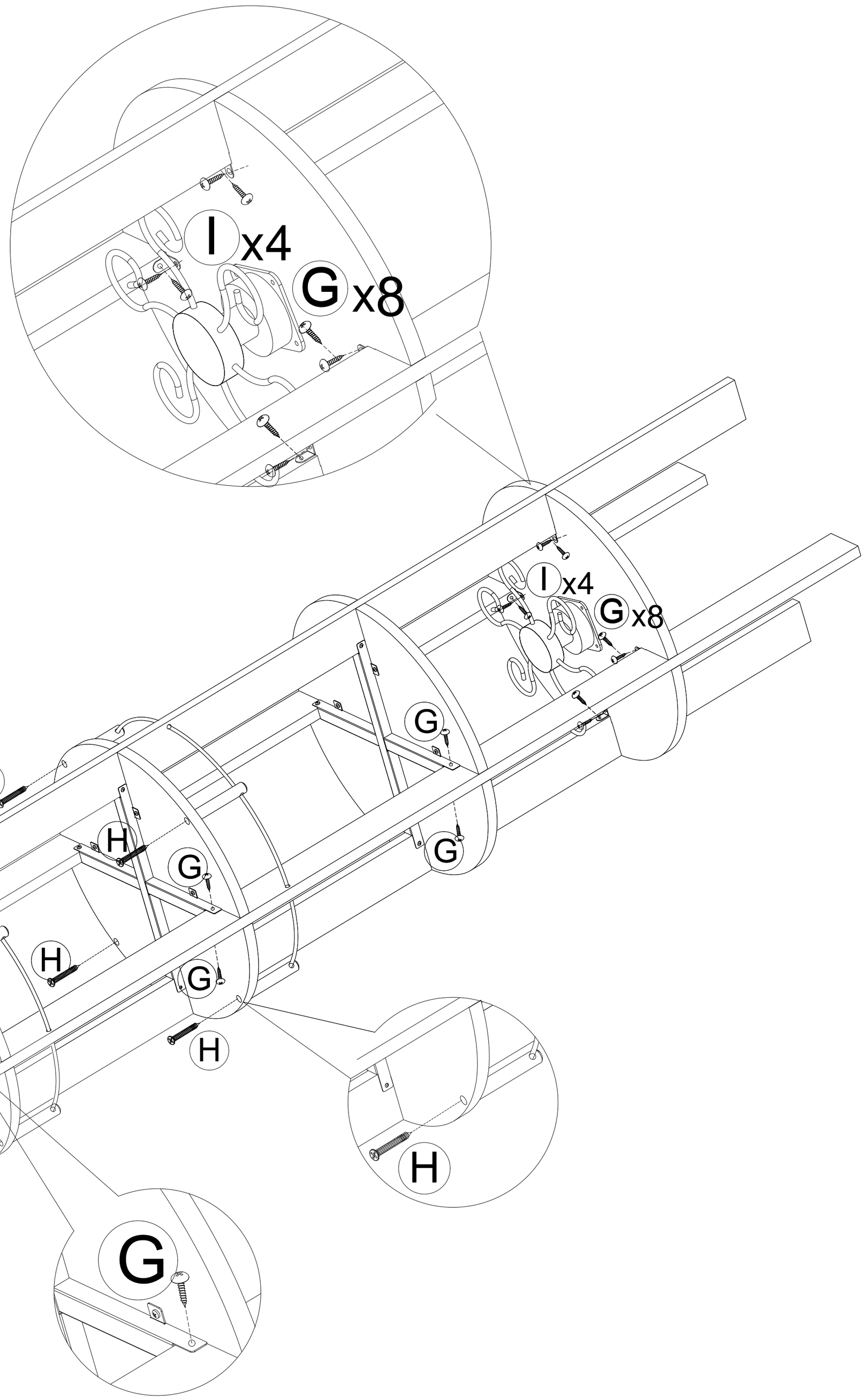

STEP 9

F



Screw 5x40 16PCS

H



Screw 4x35 4PCS

STEP 10

E

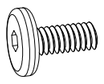

M6x12mm Bolt 4pcs

K

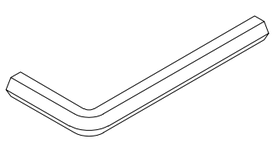

Allen key 1PC

