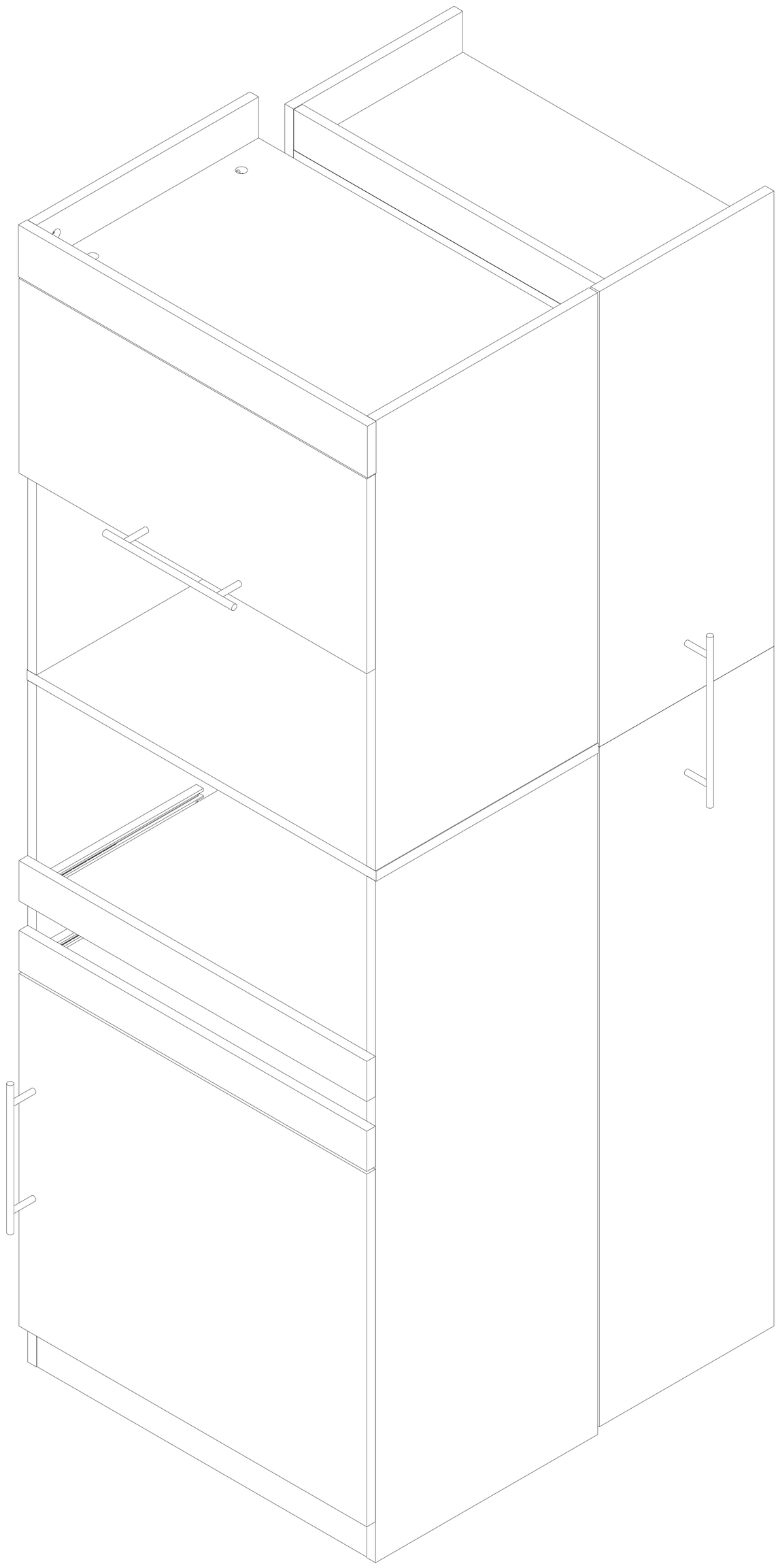

General Guidelines

- Please read the following instruction carefully and use the product accordingly.
- Please keep this manual and hand it over when you transfer the product.
- Please check that you have all the listed components and tools, before you start assembling the item.
- Assemble the item as close to its final position(in the same room) as possible.

Care and Maintanance

- The product is intended for indoor use only. The product must be assembled and used in accordance
- with the provisions of the manual.
- Avoid long-term exposure to humid environments to prevent mildew.
- Keep the product away from fire sources and high temperatures. Do not expose the product to direct sunlight.
- Do not place any hot objects on the surface of the product.

Warning ⚠

- Keep children and animals away from the work area, small parts could choke if swallowed.
- Children are not allowed to climb or stand on the product to avoid personal injury caused by the product tilting or tipping over.
- Please do not use the product if there is/are defective and/or missing part/s, as this can result in damage or injury.
- To avoid the potential dangers of suffocation, please keep all parts and packaging (film, plastic bags, foam, etc.) away from babies and children.

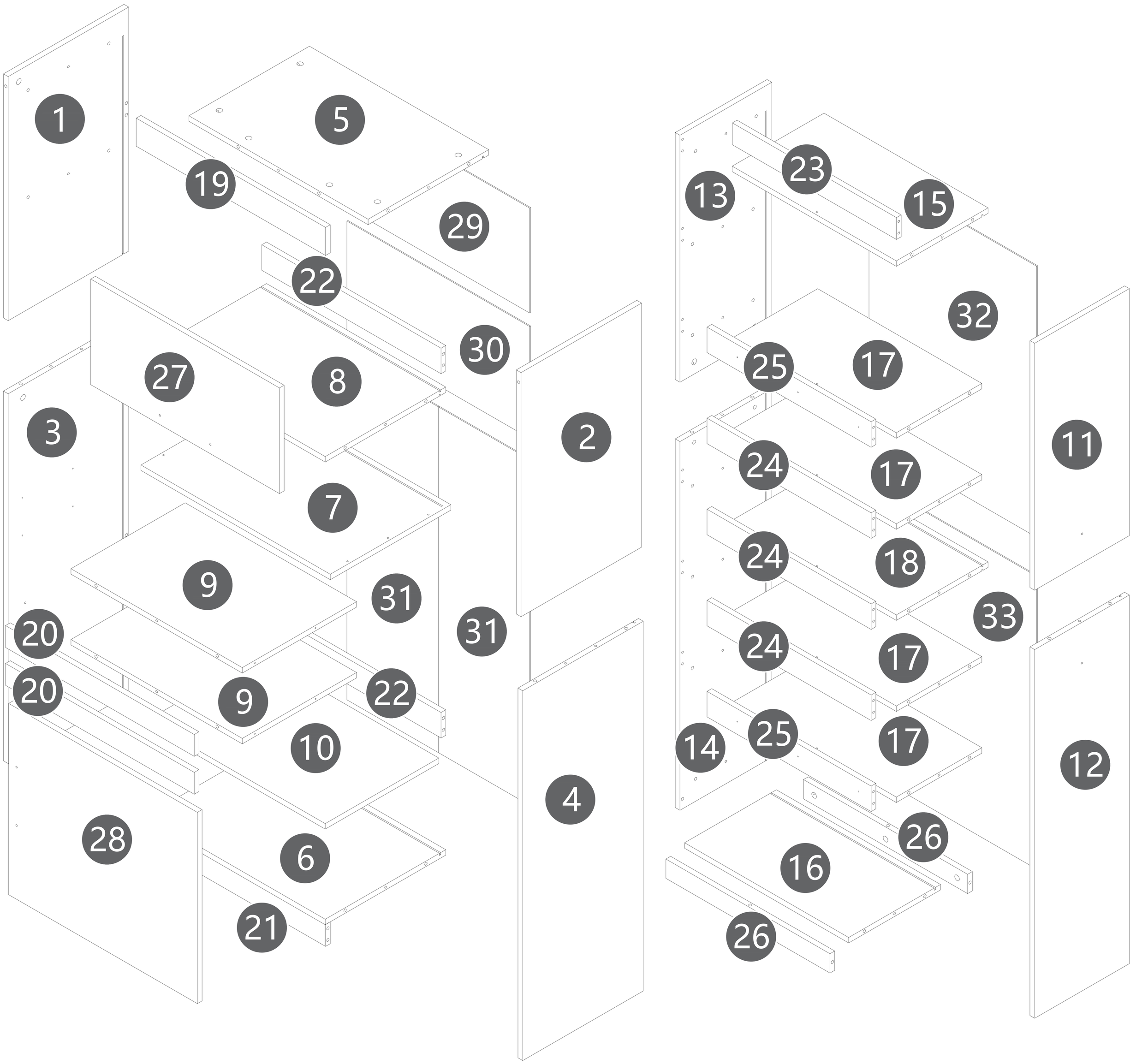
1
5
19
29
22
30
27
8
3
2
7
9
31
31
20
20
9
22
10
28
6
21
4
23
13
15
32
25
17
11
24
17
24
18
33
24
17
14
25
17
12
26
16
26

1 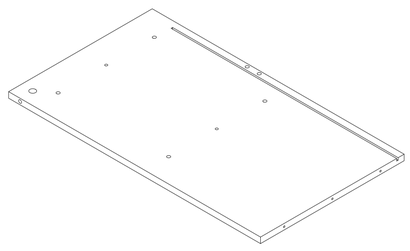 670*382(mm) 26.38*15.04(inch) 1PC	2 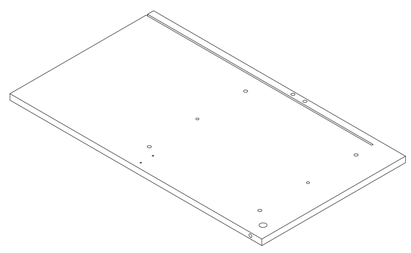 670*382(mm) 26.38*15.04(inch) 1PC	3 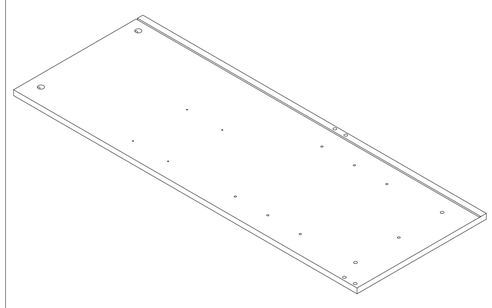 1015*382(mm) 39.96*15.04(inch) 1PC	4 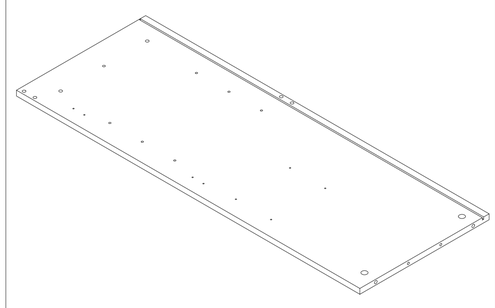 1015*382(mm) 39.96*15.04(inch) 1PC	5 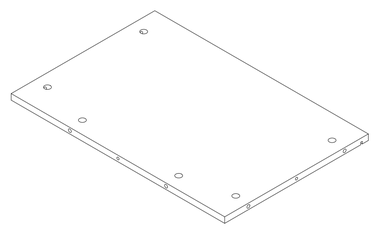 568*382(mm) 22.36*15.04(inch) 1PC
6 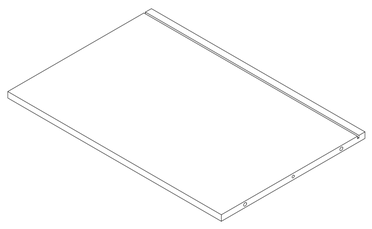 568*382(mm) 22.36*15.04(inch) 1PC	7 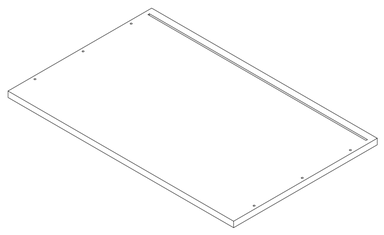 600*382(mm) 23.62*15.04(inch) 1PC	8 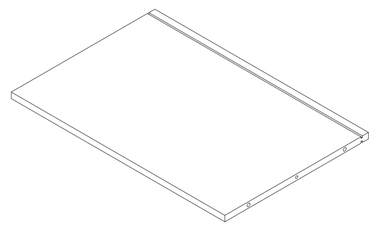 568*382(mm) 22.36*15.04(inch) 1PC	9 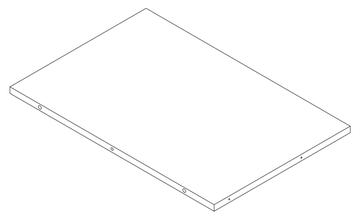 543*362(mm) 21.38*14.25(inch) 2PCS	10 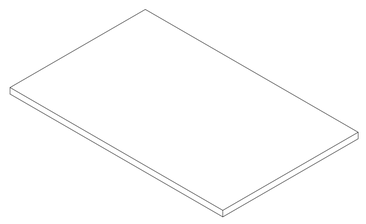 566*360(mm) 22.28*14.17(inch) 1PC
11 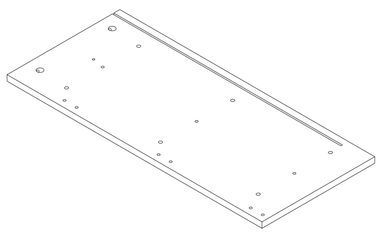 678*300(mm) 26.69*11.81(inch) 1PC	12 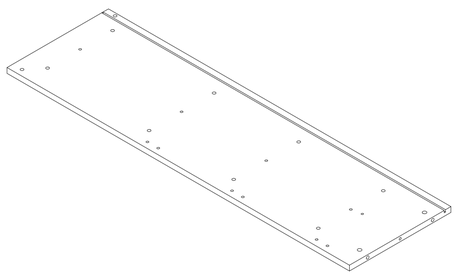 1012*300(mm) 39.84*11.81(inch) 1PC	13 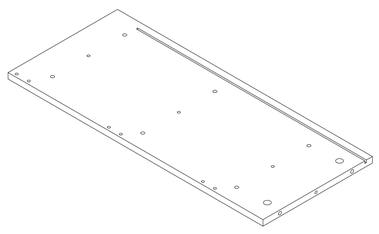 678*291(mm) 26.69*11.46(inch) 1PC	14 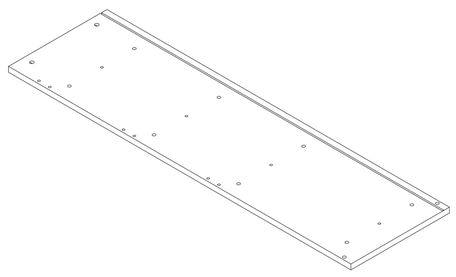 1012*291(mm) 39.84*11.46(inch) 1PC	15 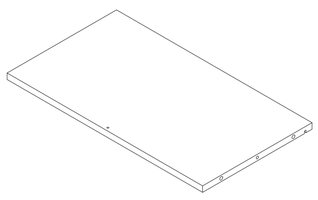 520*291(mm) 20.47*11.46(inch) 1PC
16 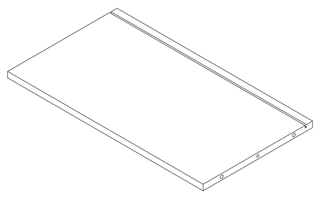 520*291(mm) 20.47*11.46(inch) 1PC	17 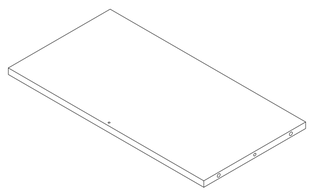 520*271(mm) 20.47*10.67(inch) 4PCS	18 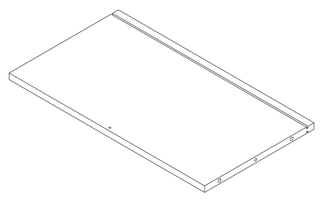 520*291(mm) 20.47*11.46(inch) 1PC	19 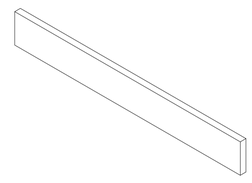 600*77(mm) 23.62*3.03(inch) 1PC	20 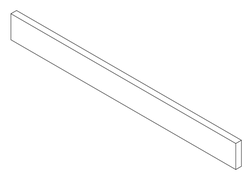 598*60(mm) 23.54*2.36(inch) 2PCS
21 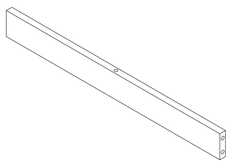 568*60(mm) 22.36*2.36(inch) 1PC	22 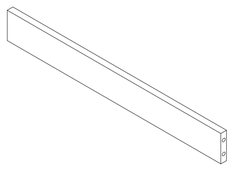 568*70(mm) 22.36*2.76(inch) 2PCS	23 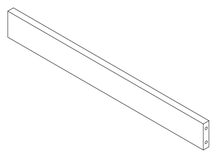 520*60(mm) 20.47*2.36(inch) 1PC	24 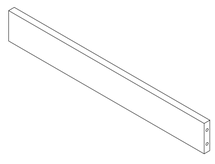 520*70(mm) 20.47*2.76(inch) 3PCS	25 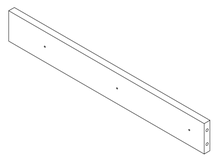 520*70(mm) 20.47*2.76(inch) 2PCS

26 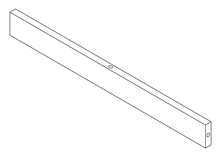 520*53(mm) 20.47*2.09(inch) 2PCS	27 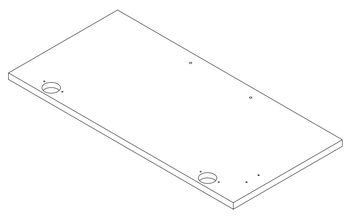 290*598(mm) 11.42*23.54(inch) 1PC	28 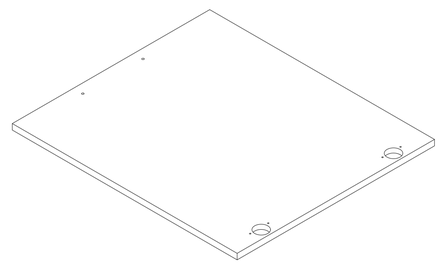 525*598(mm) 20.67*23.54(inch) 1PC	29 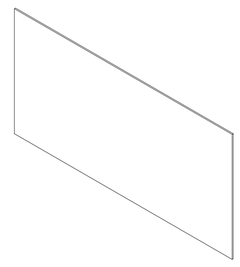 288*579(mm) 11.34*22.8(inch) 1PC	30 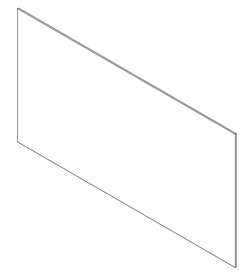 307*579(mm) 12.09*22.8(inch) 1PC
31 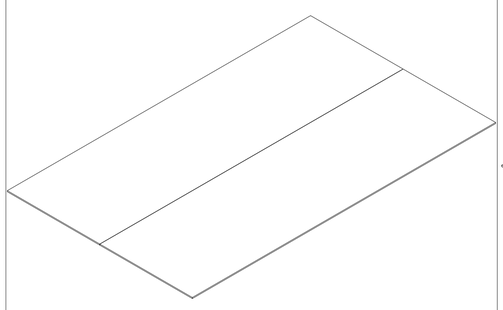 949*289.5(mm) 37.36*11.4(inch) 2PCS	32 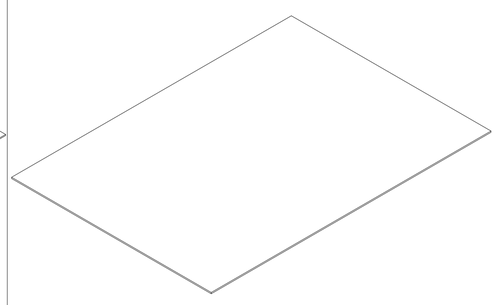 744*531(mm) 29.29*20.91(inch) 1PC	33 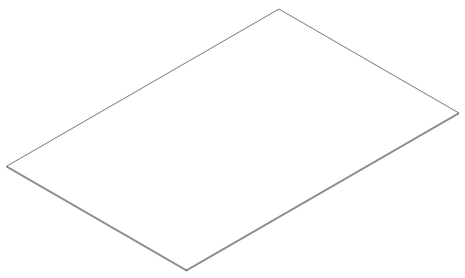 804*531(mm) 31.65*20.91(inch) 1PC		

A 71x

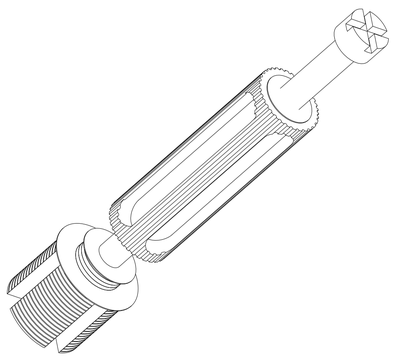

B 75x

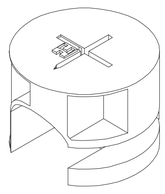

15x12mm

C 51x

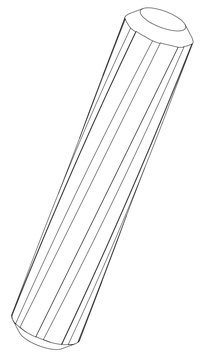

M8x40mm

D 12x

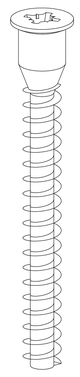

M7x50mm

E 26x

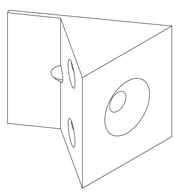

F 26x

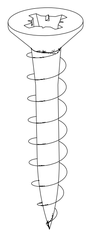

M3x12mm

G 74x

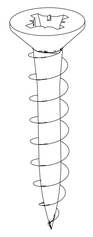

M3.5x14mm

H 2x

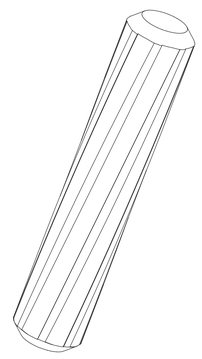

M8x60mm

I 2x

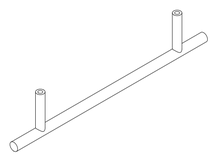

160mm

J 1x

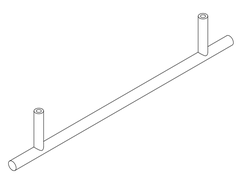

192mm

K 2x

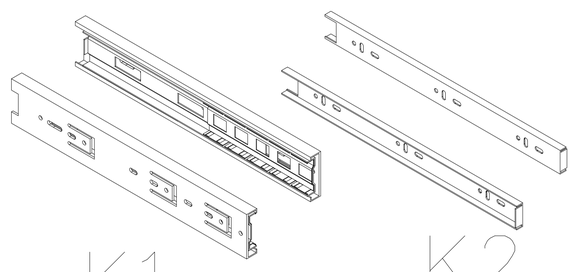

K1 K2

300mm

L 1x

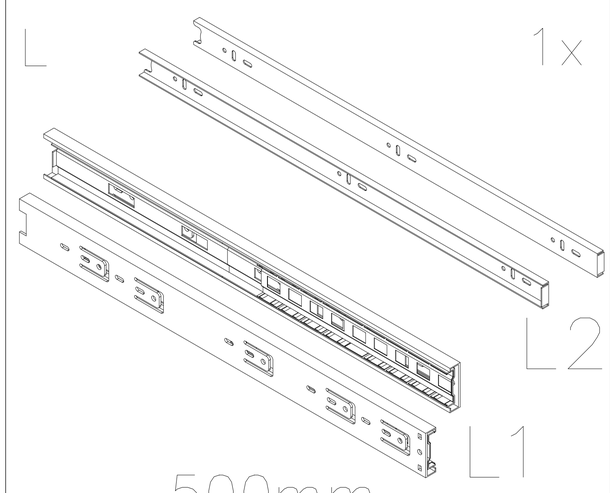

L2 L1

500mm

M 4x



M10x11mm

N 4x

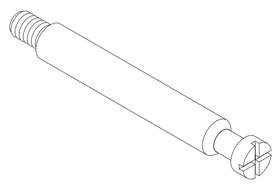

60mm

O 2x

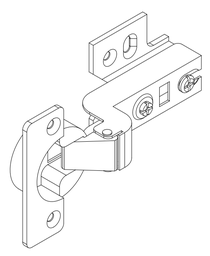

P 2x

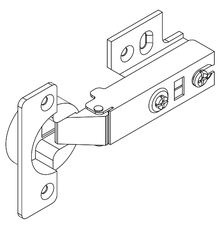

Q 1x

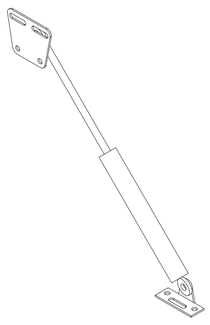

60N

R 4x

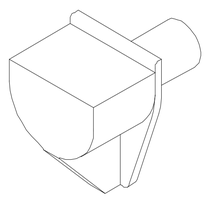

S 4x

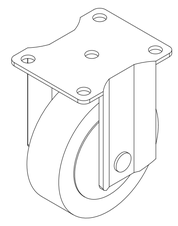

64mm

T 2x

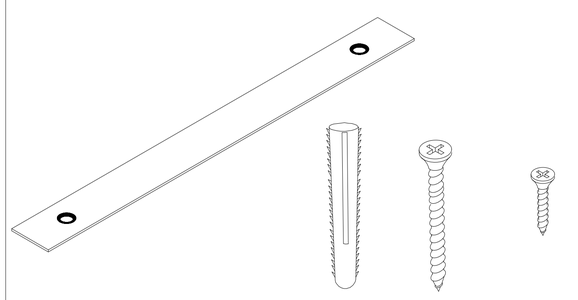

T1 T2 T3 T4

U 6x	V 50x
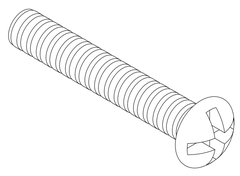 M4x22mm	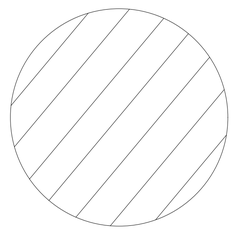

Hardware installation demonstration

NOTE:Please make sure "A"hardware tightened and can't be pulled out!

I

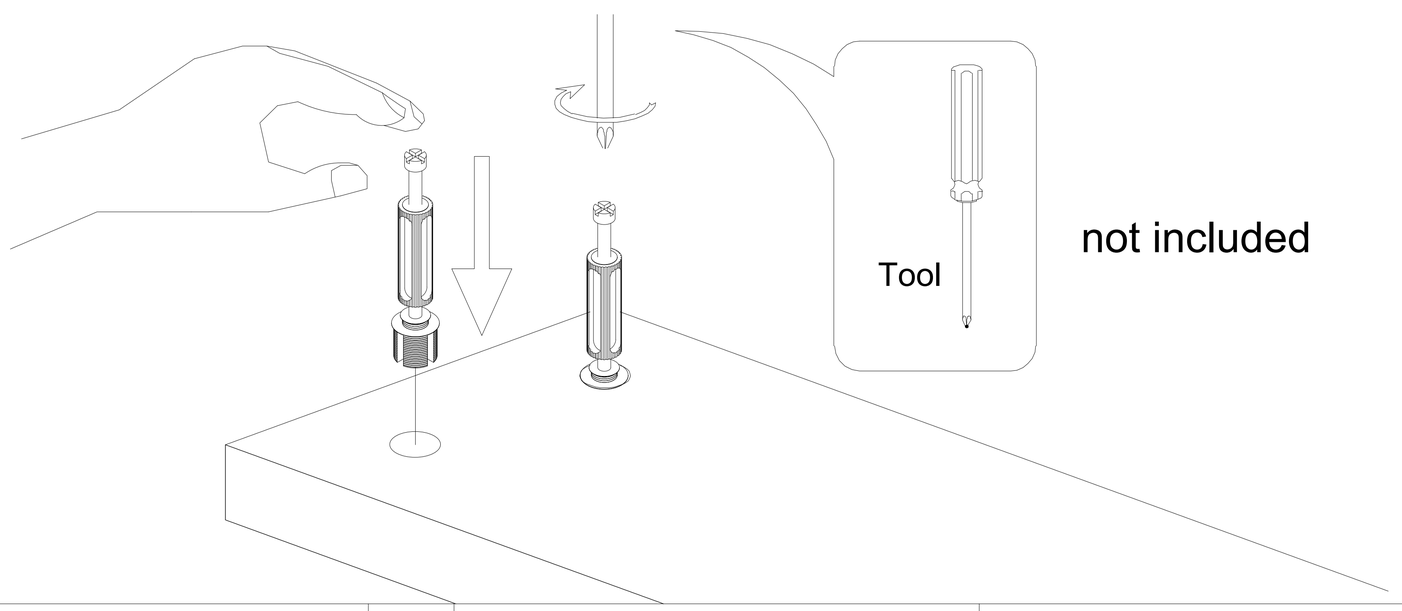

II

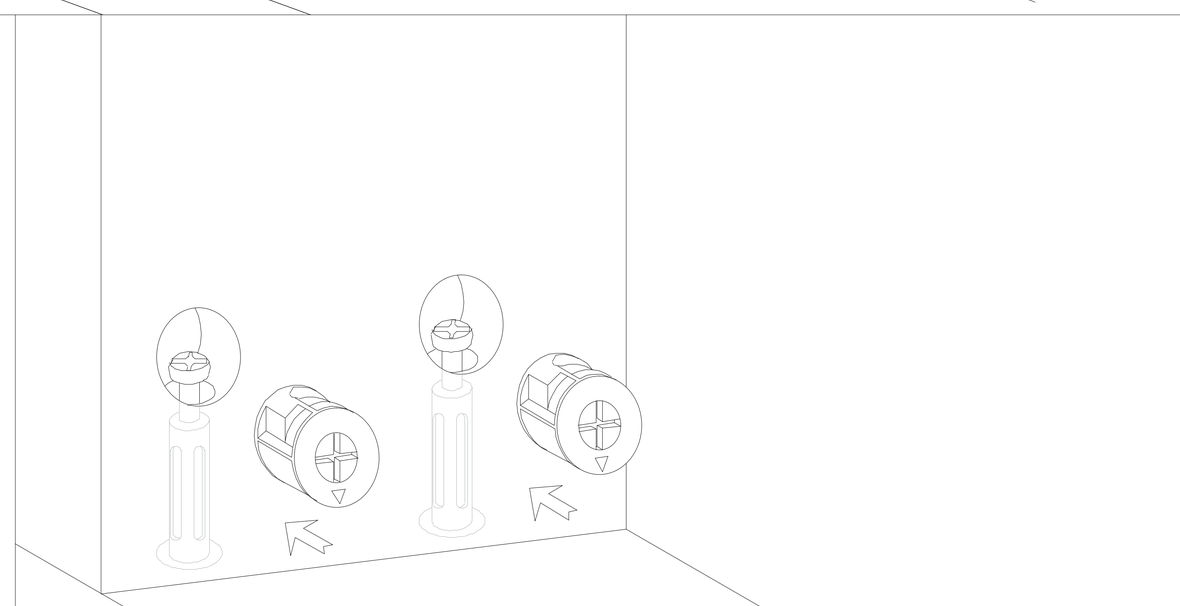

III

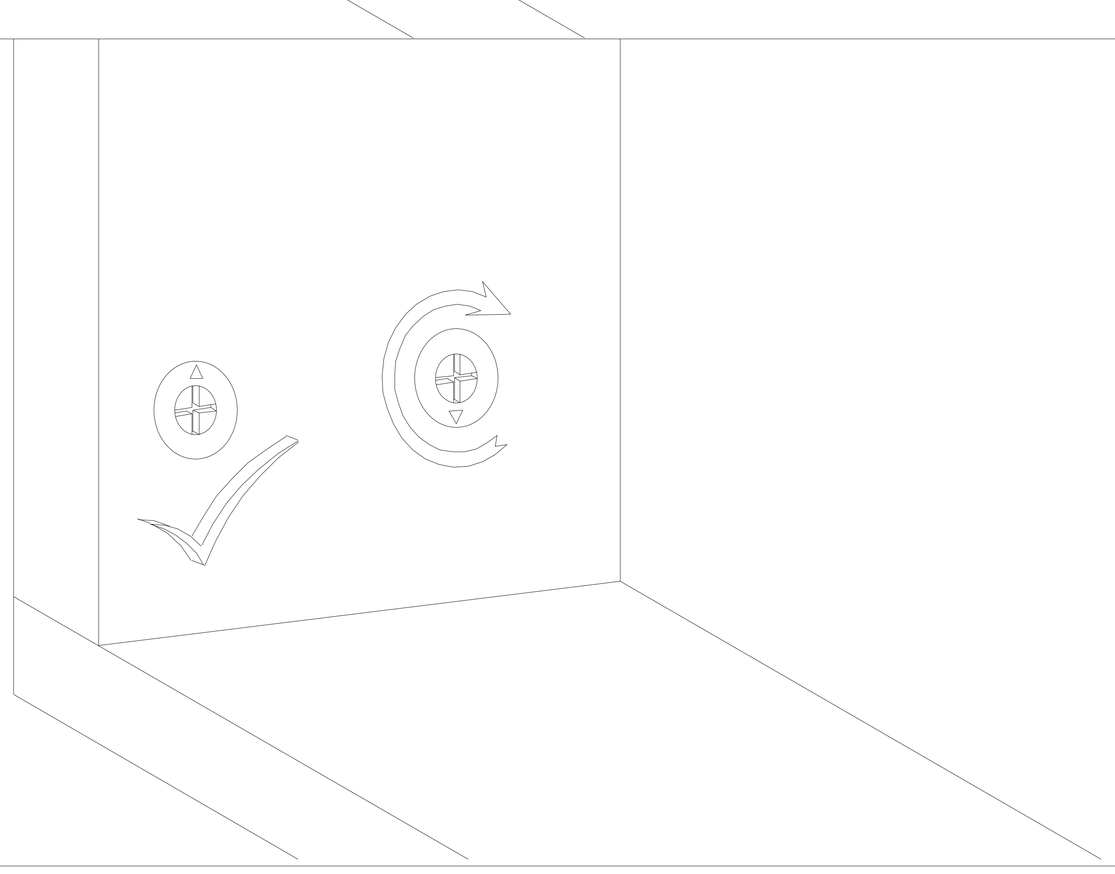

01

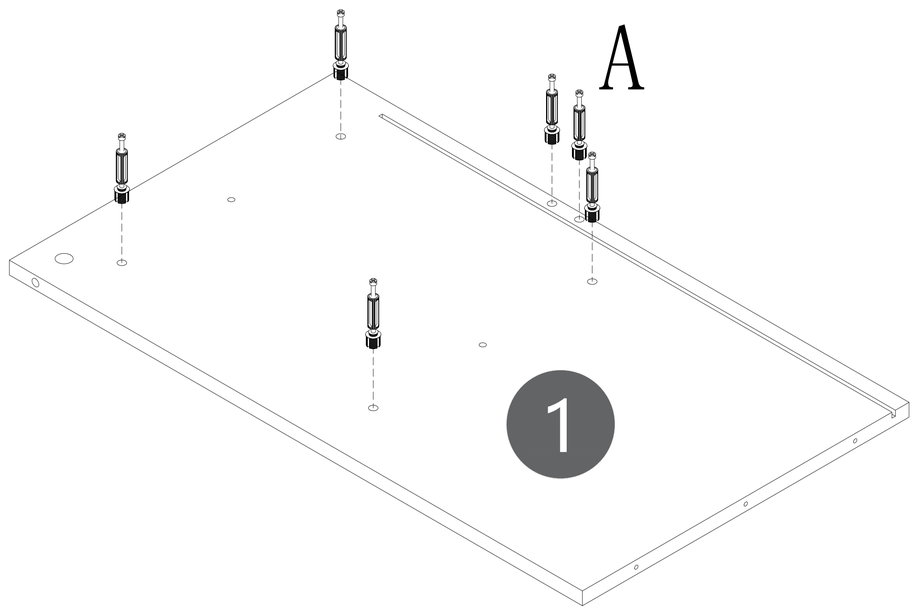

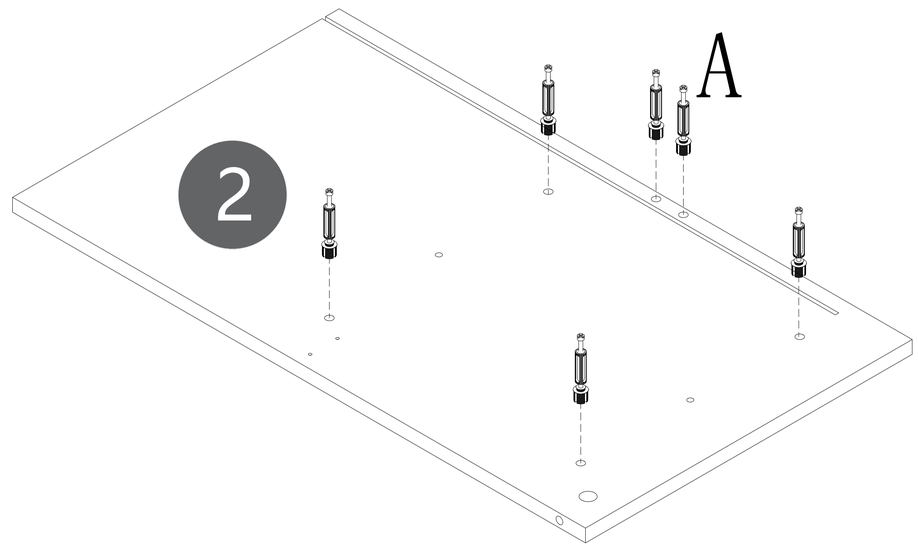

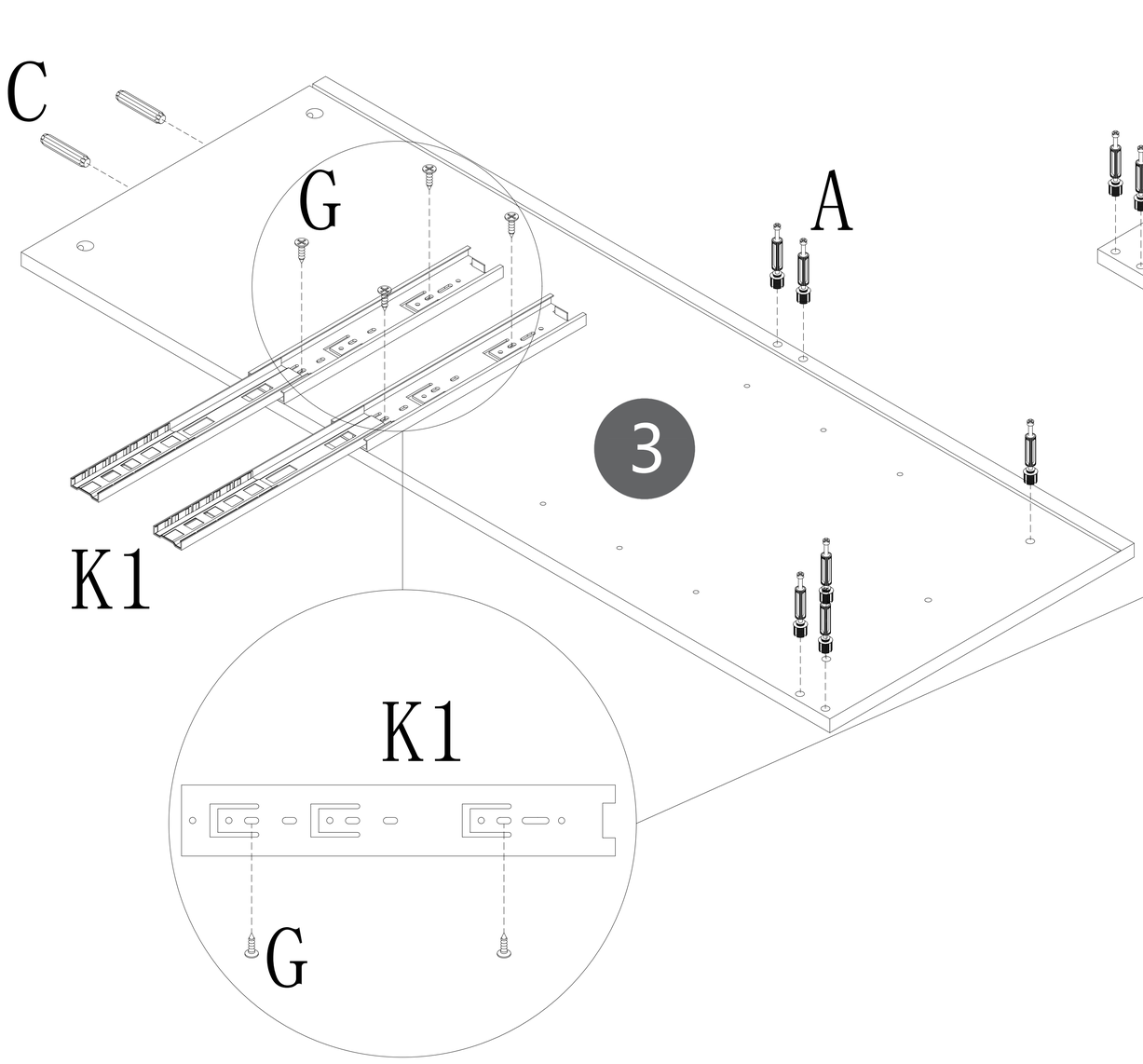

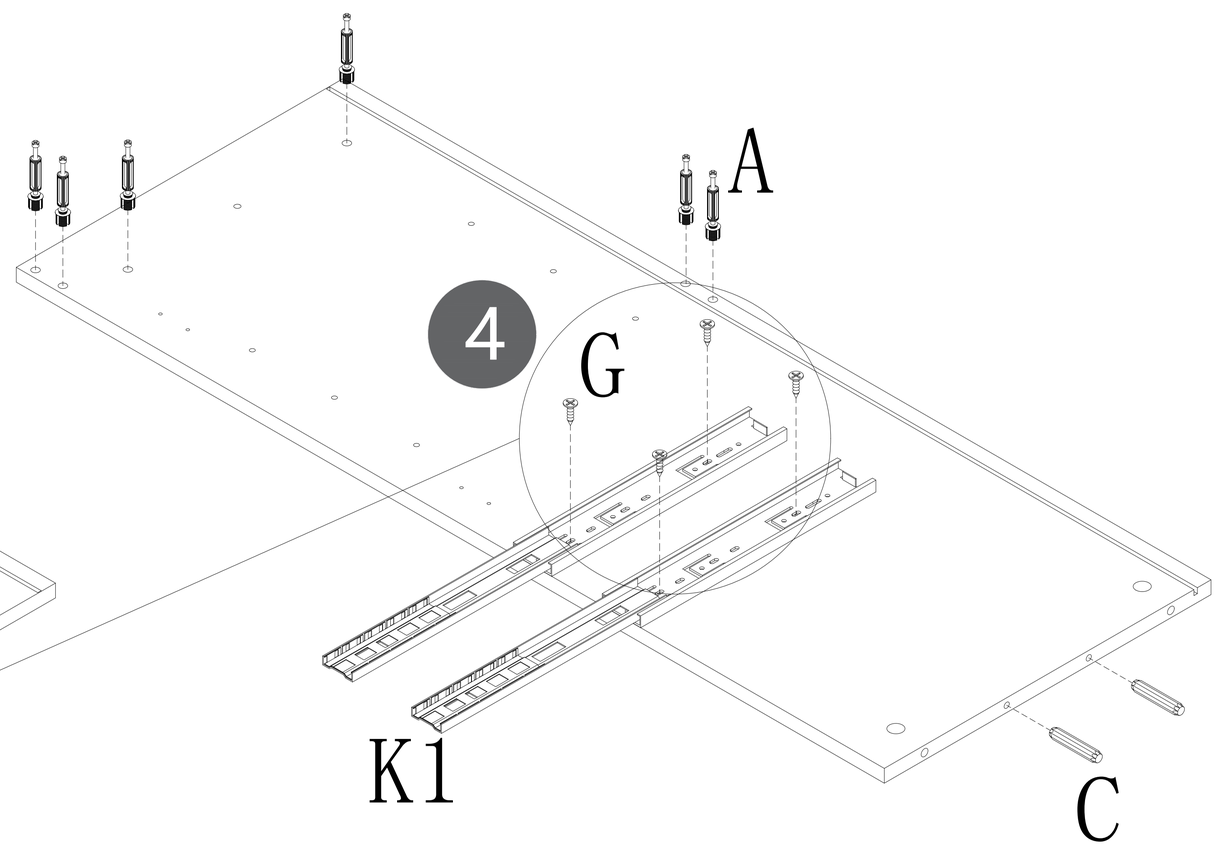

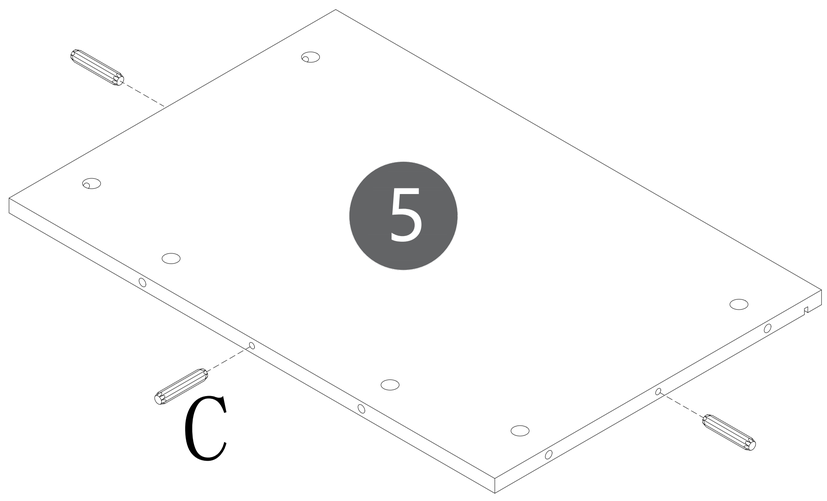

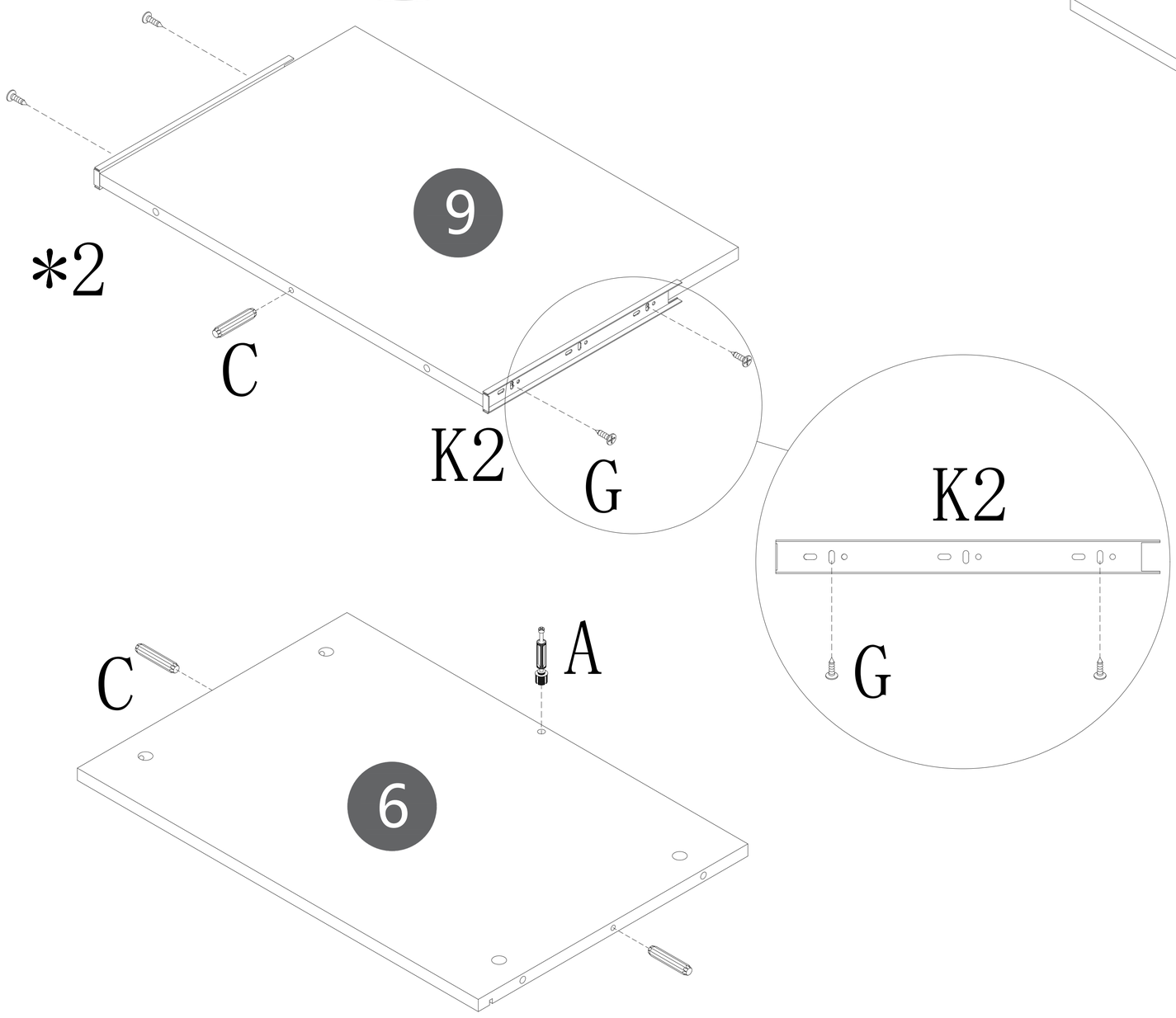

A 25x

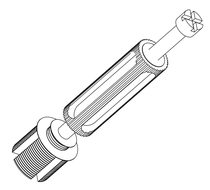

C 11x

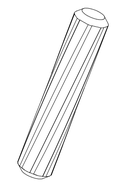

G 16x

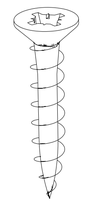

K 2x

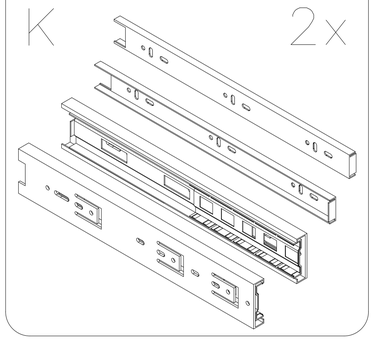

02

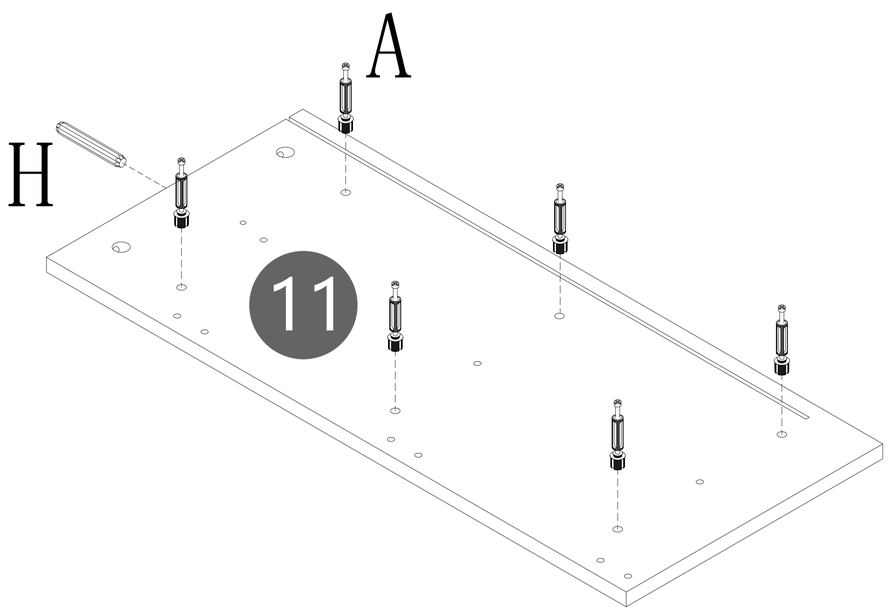

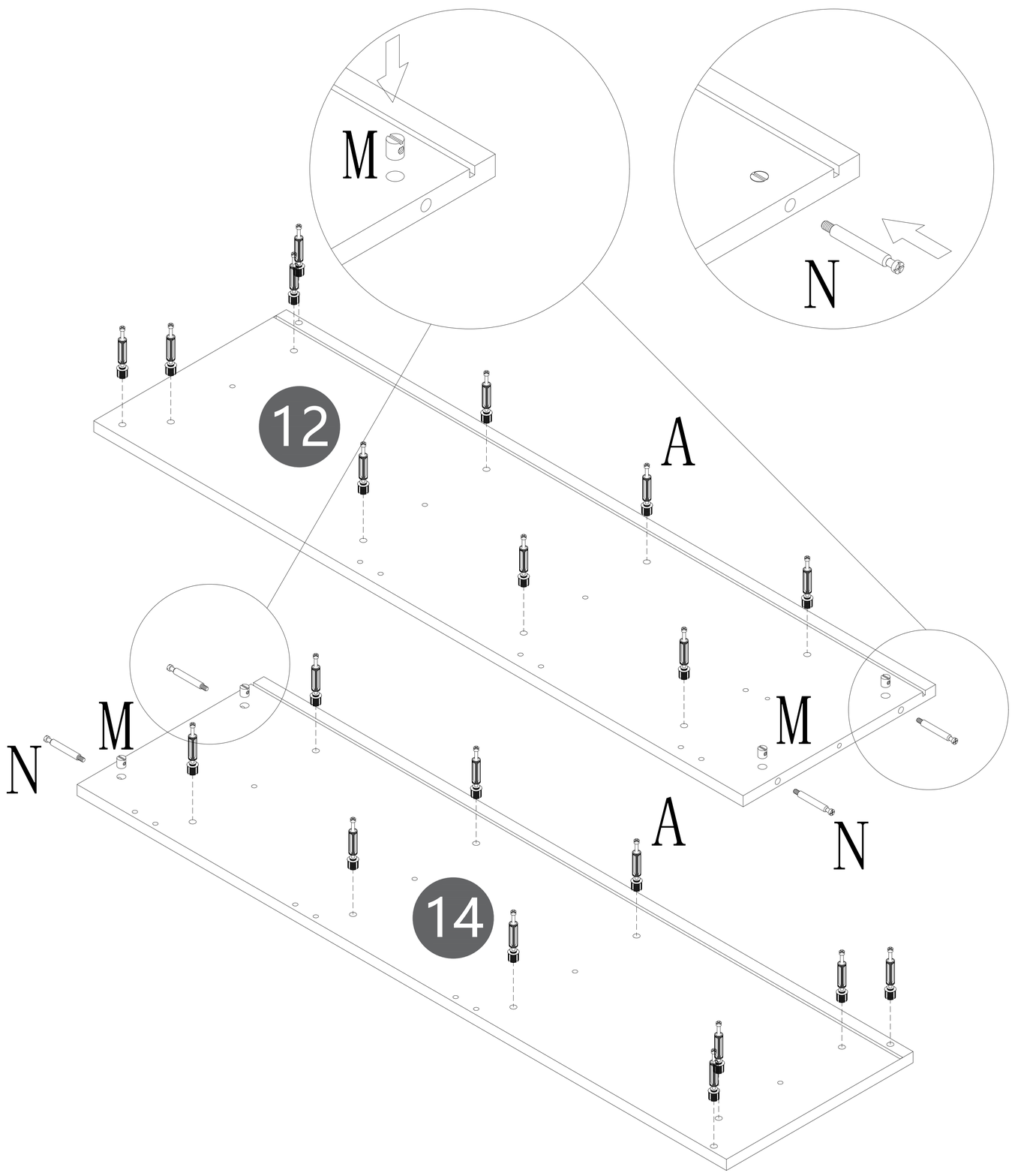

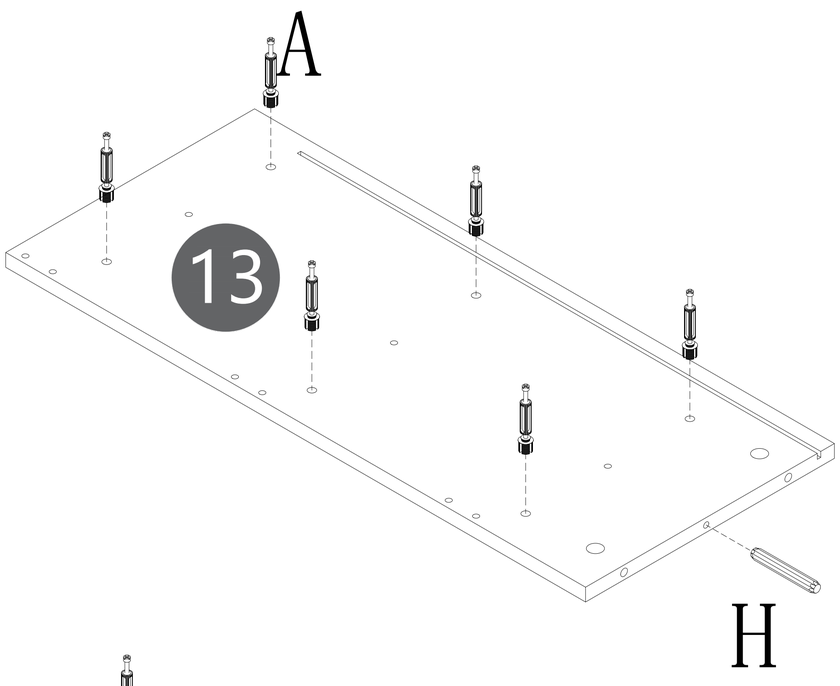

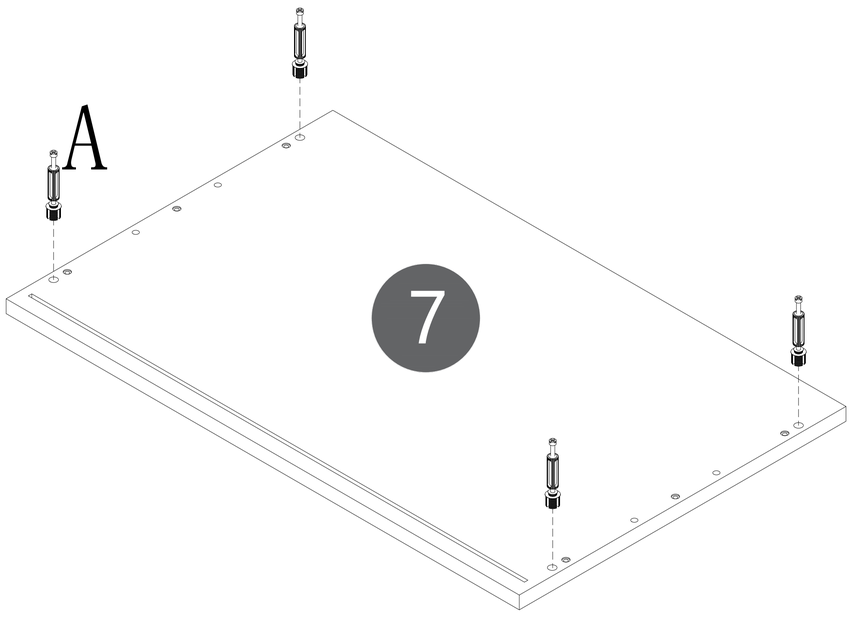

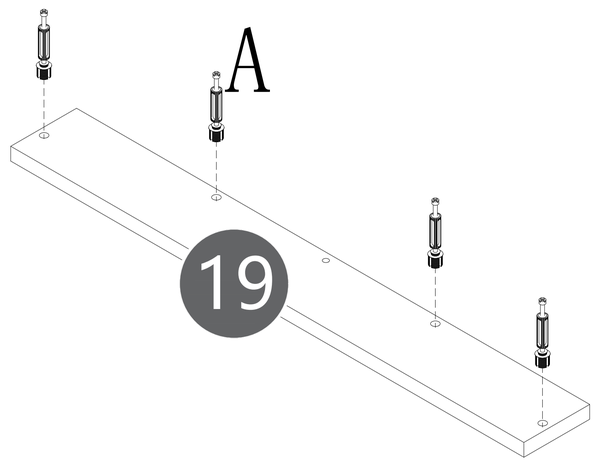

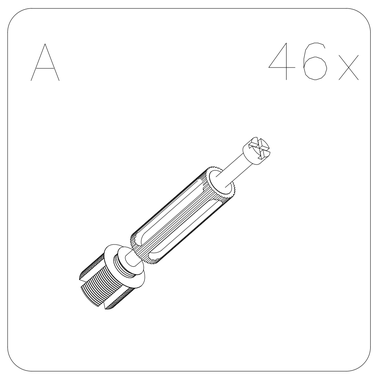

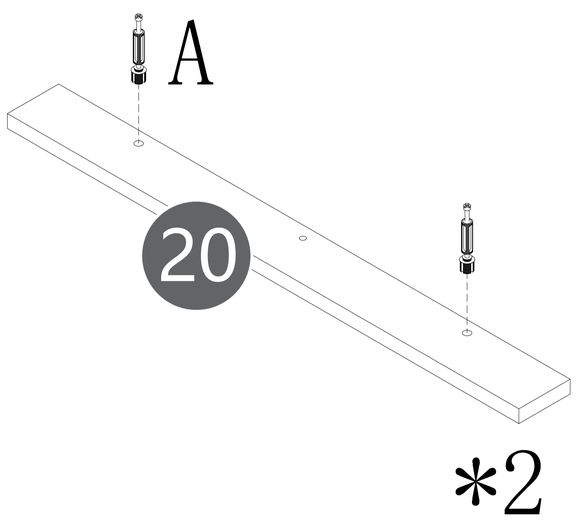

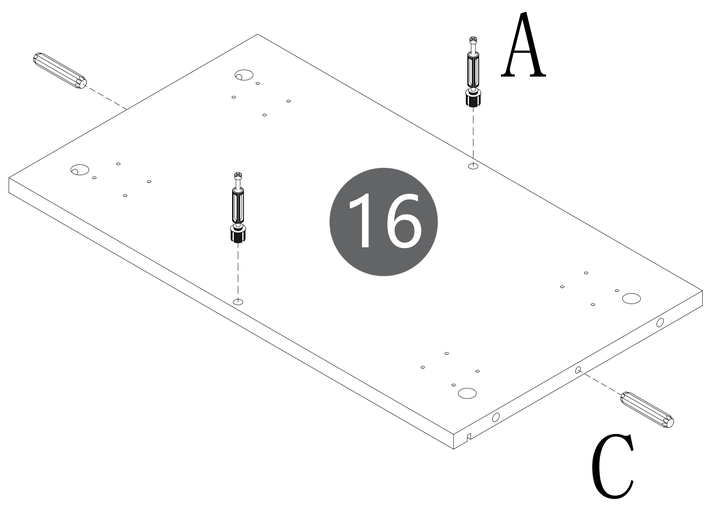

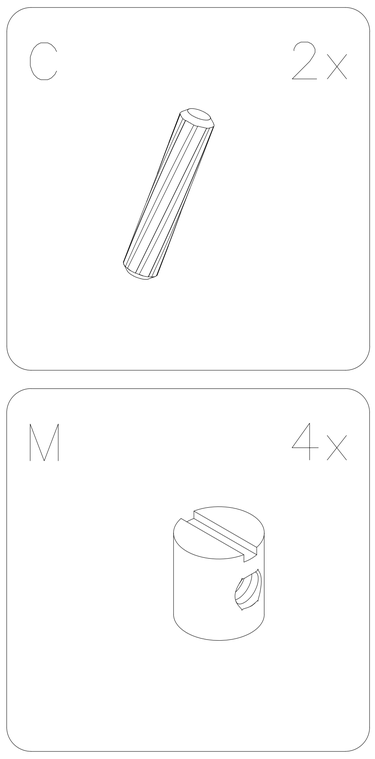

03

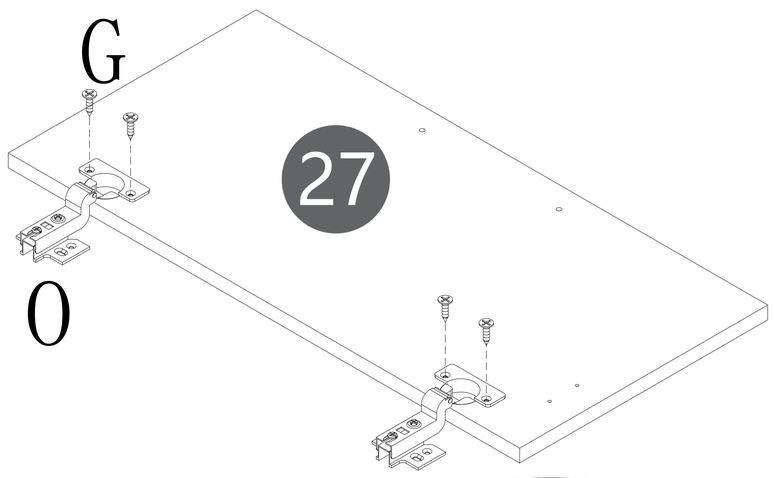
G
27
O

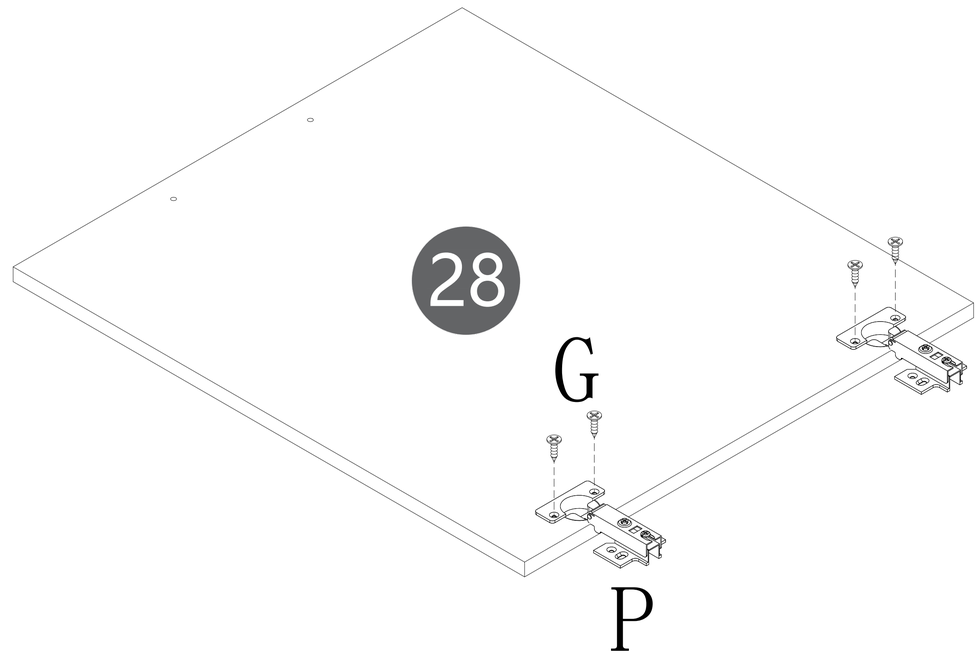
28
G
P

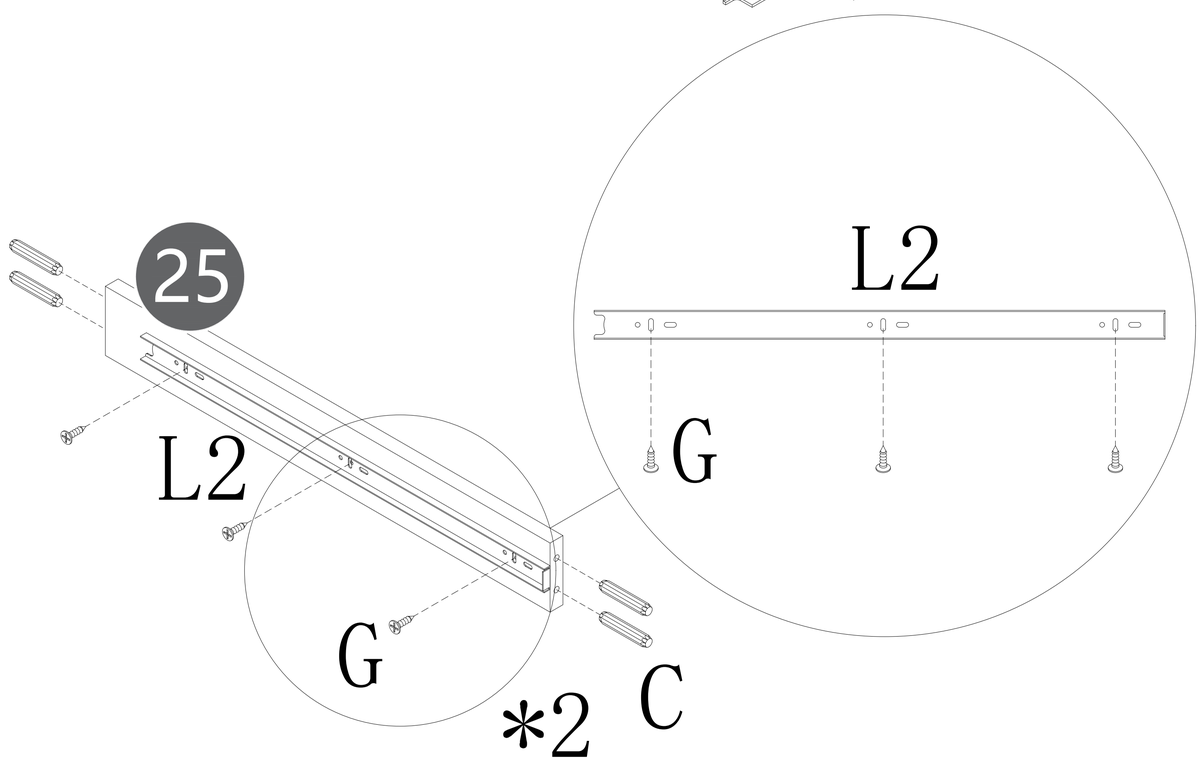
L2
25
L2
G
G
*2
C

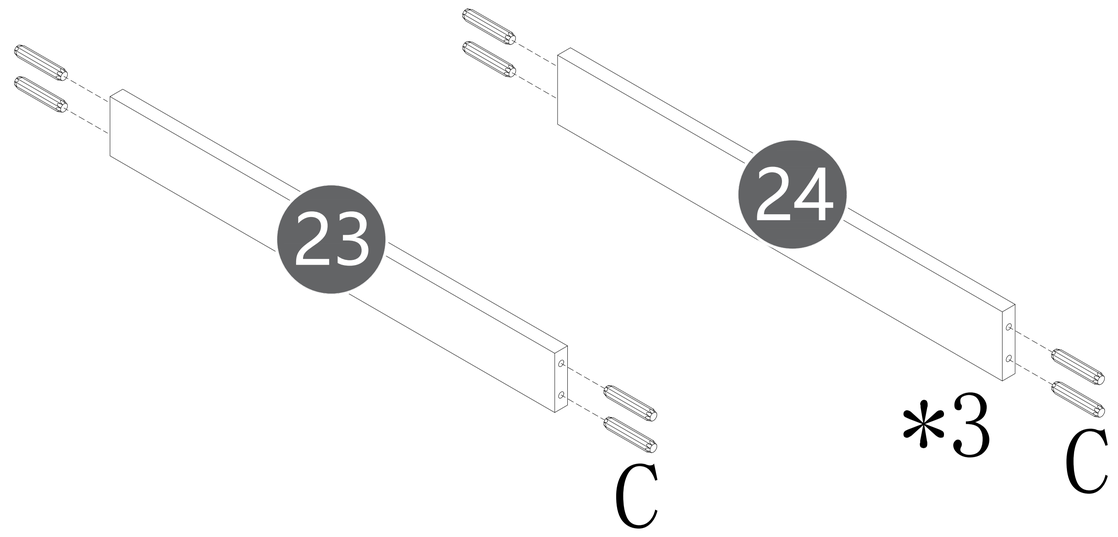
23
C
24
*3
C

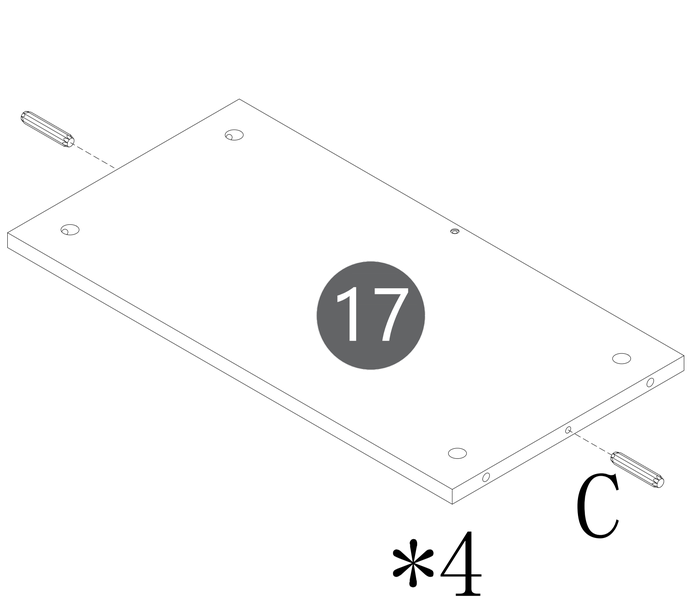
17
C
*4

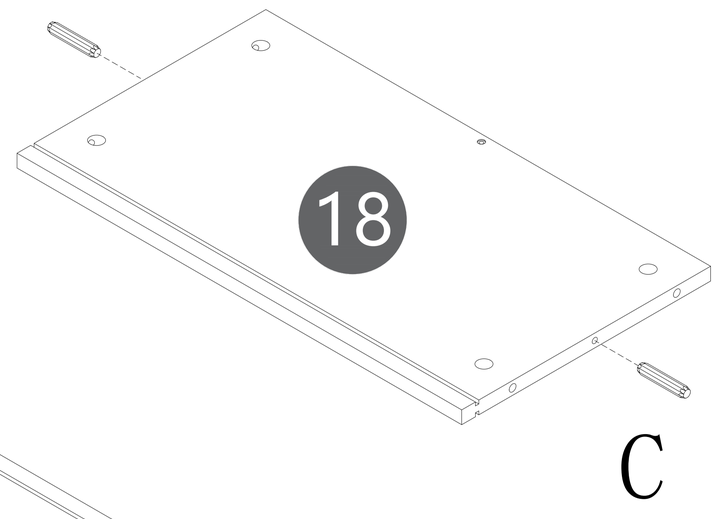
18
C

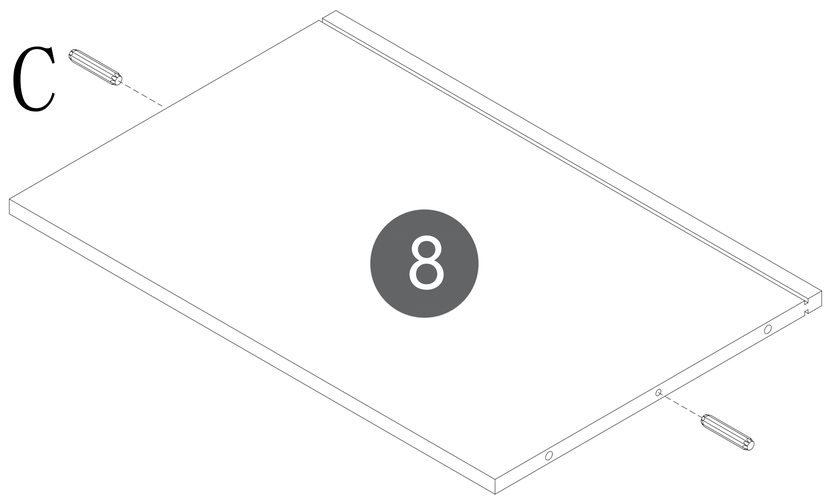
C
8

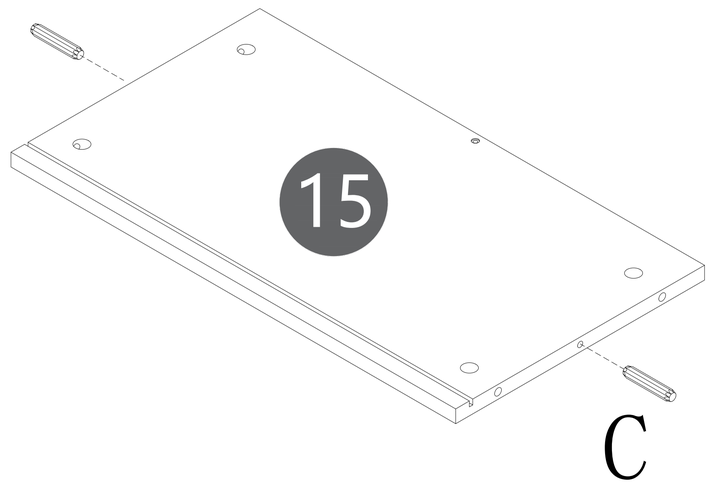
15
C

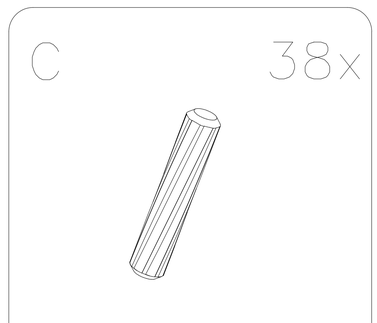
C
38x

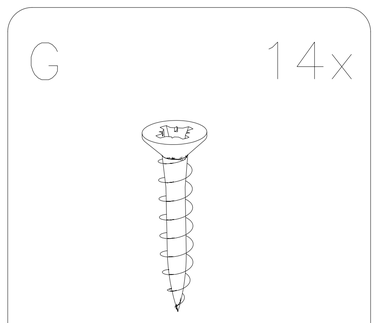
G
14x

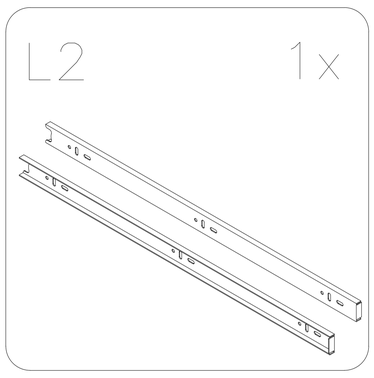
L2
1x

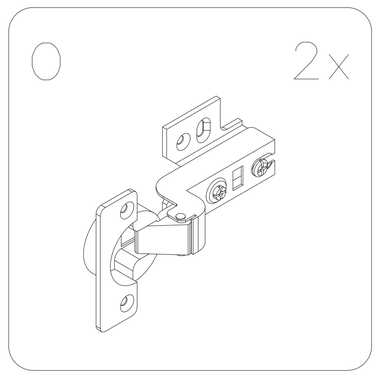
O
2x

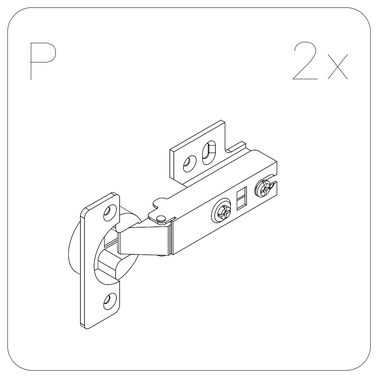
P
2x

04

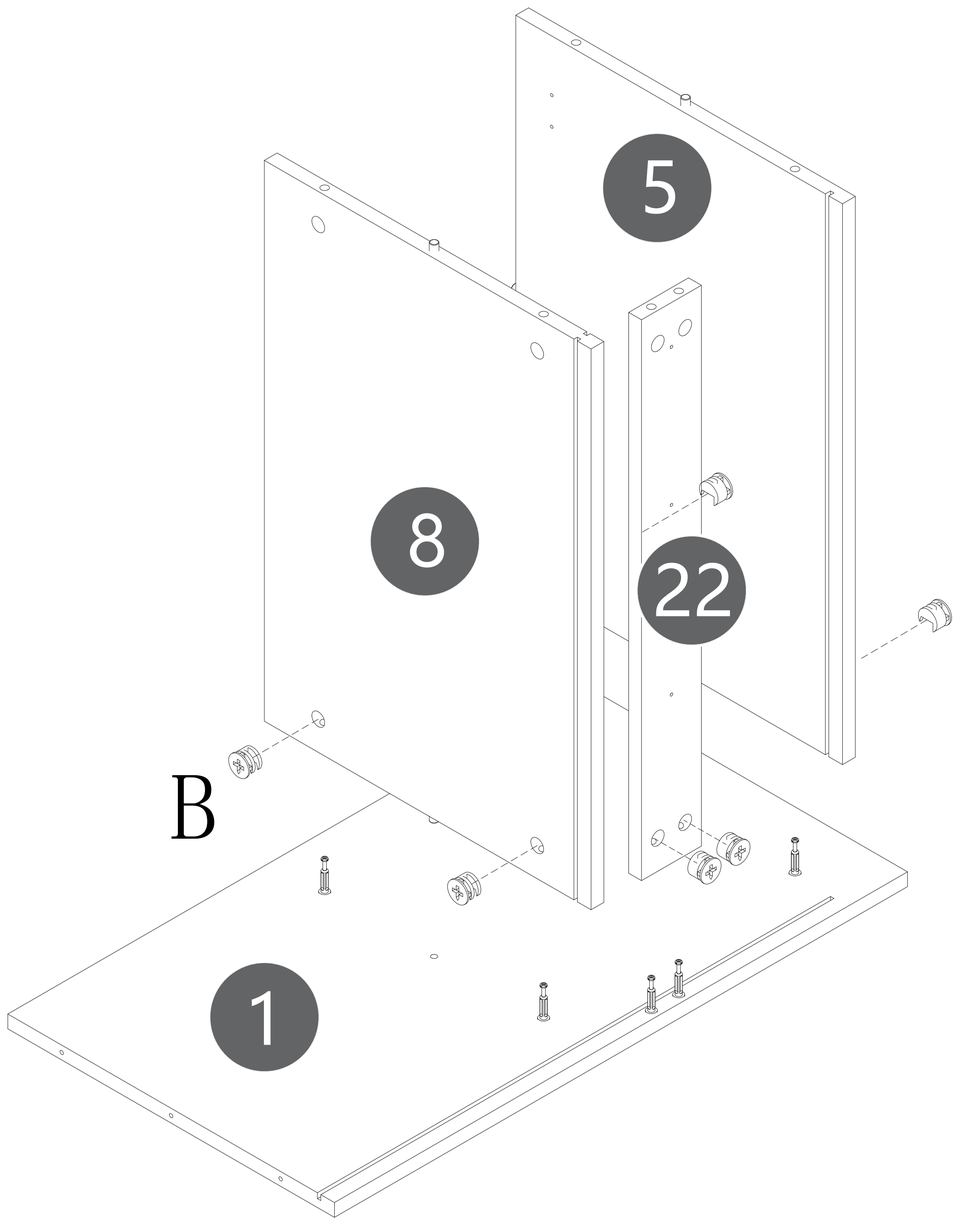

B 6x

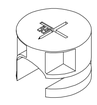

05

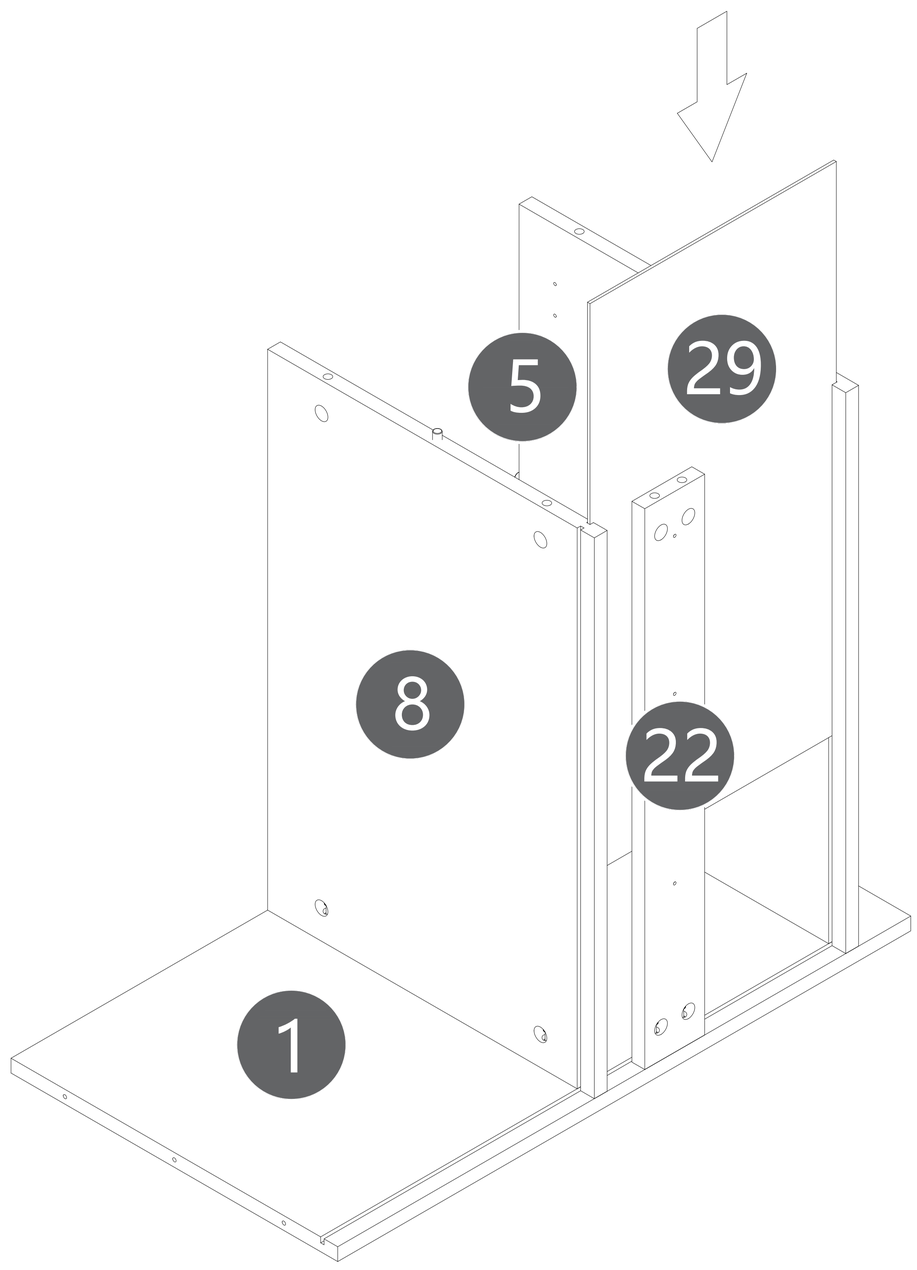

06

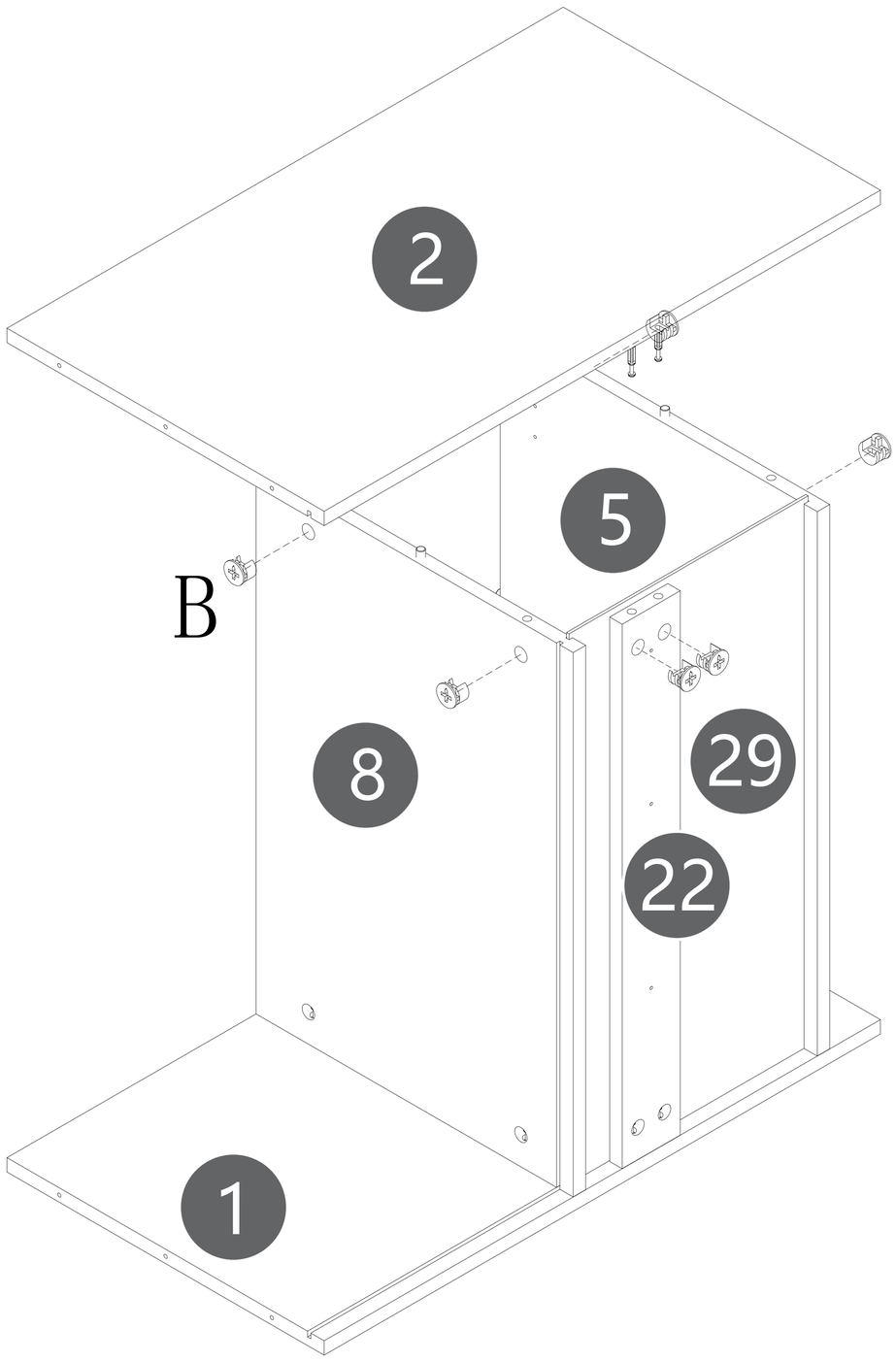

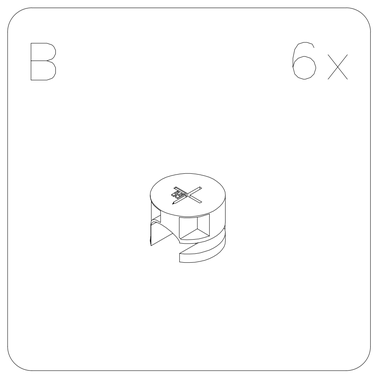

07

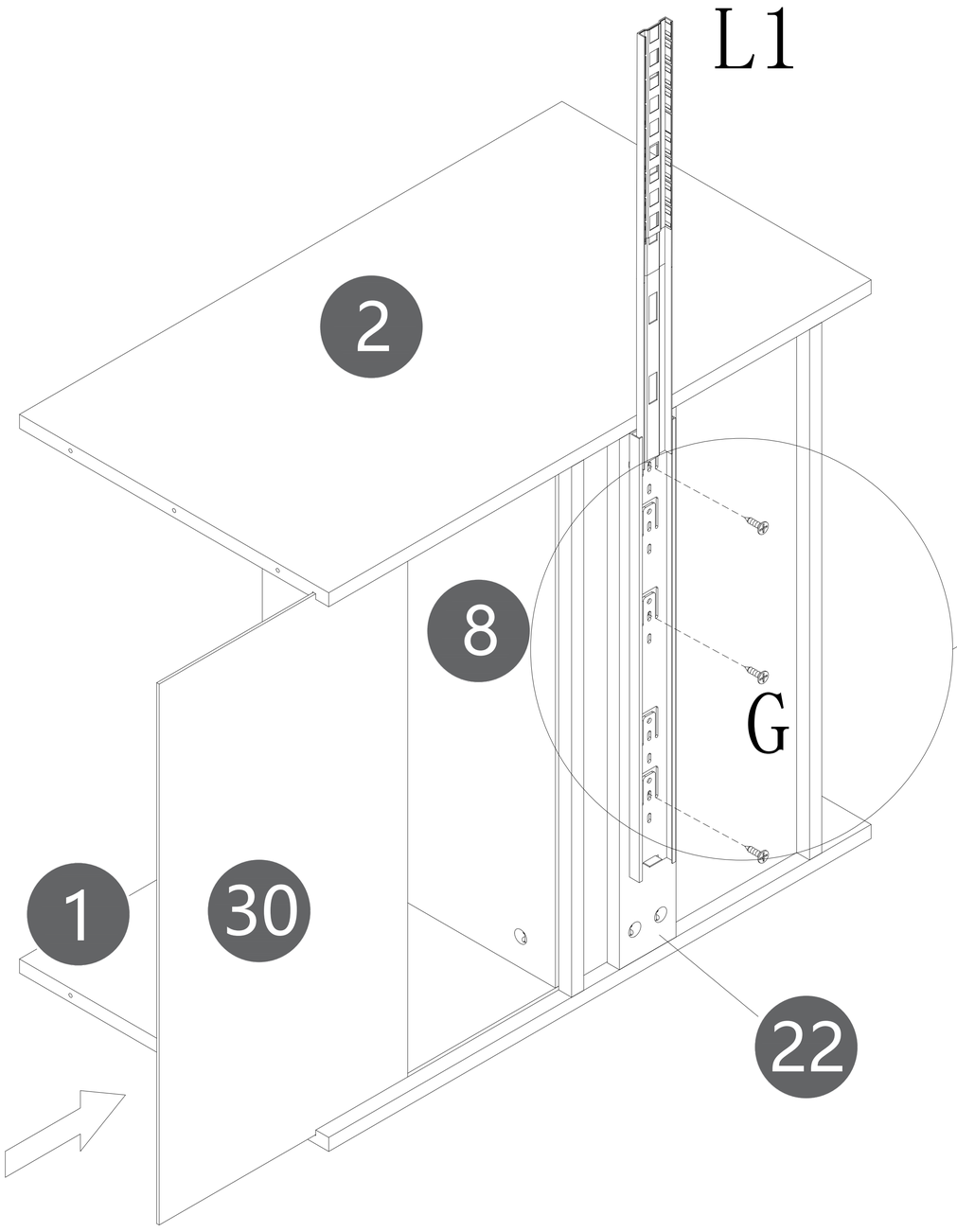

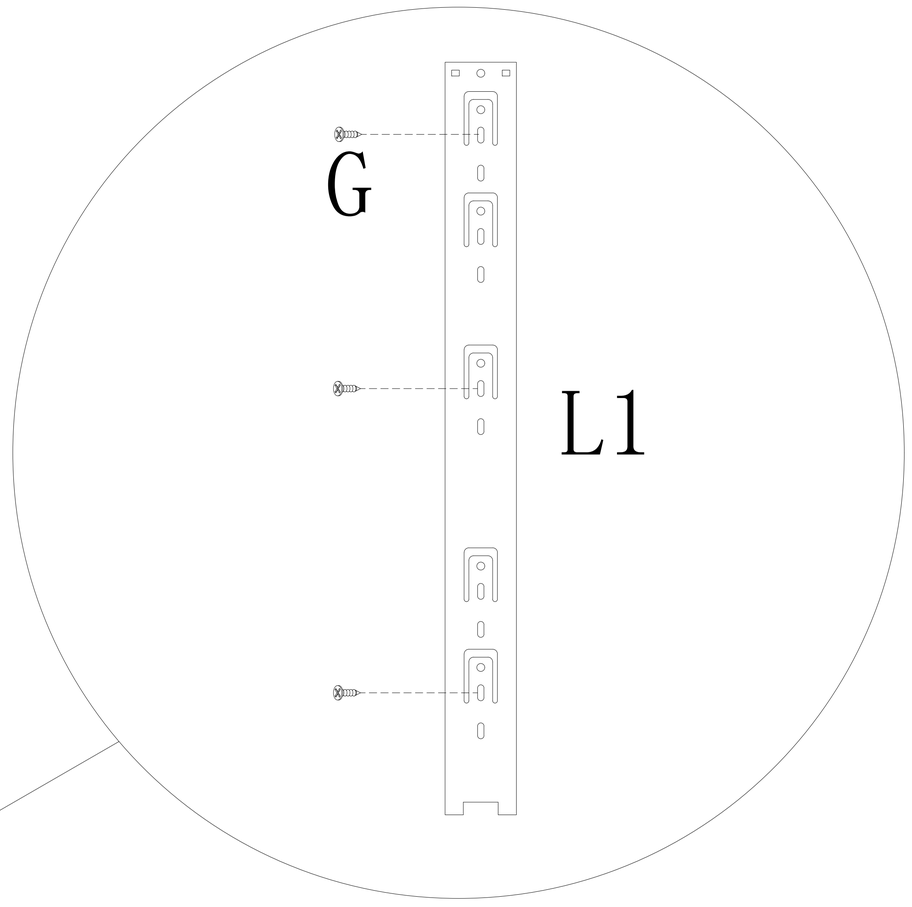

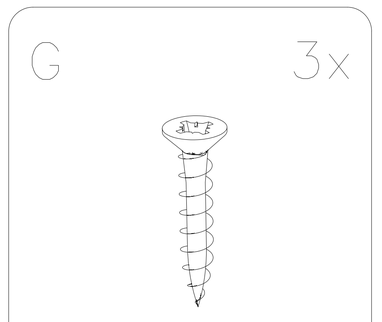

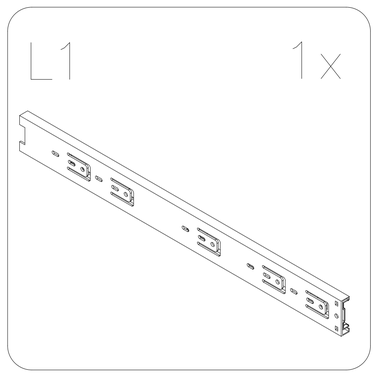

08

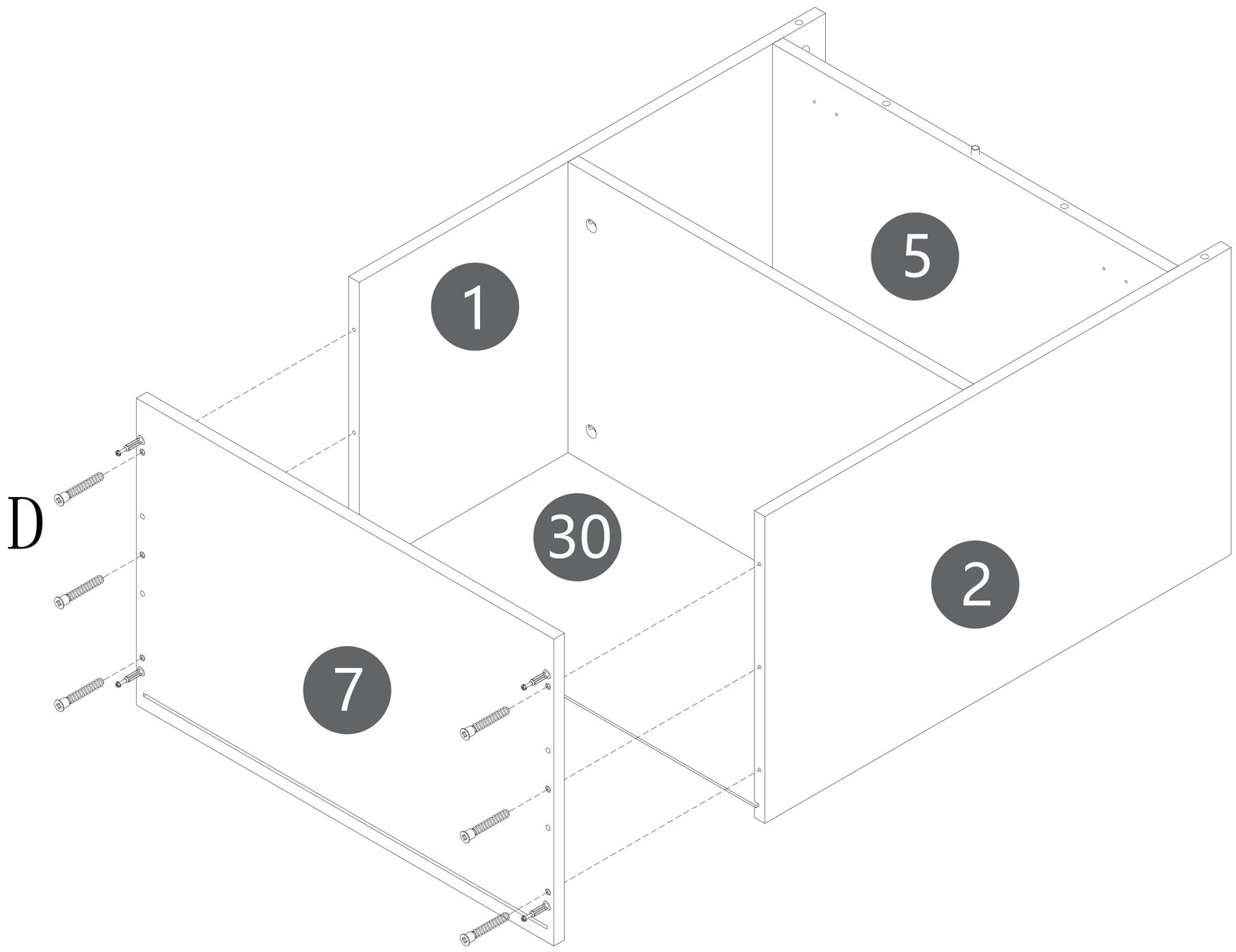

D 6x

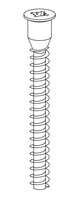

09

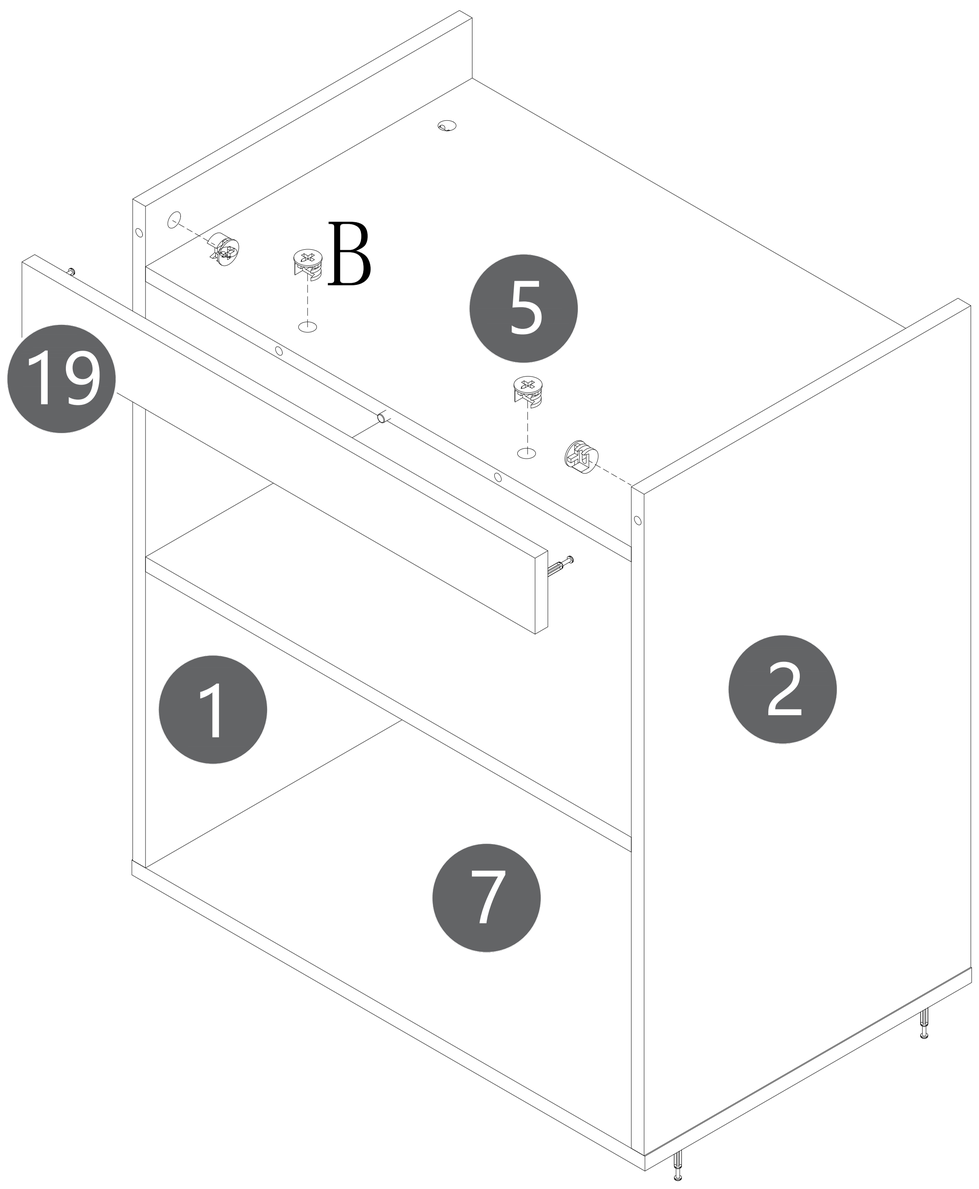

B 4x



10

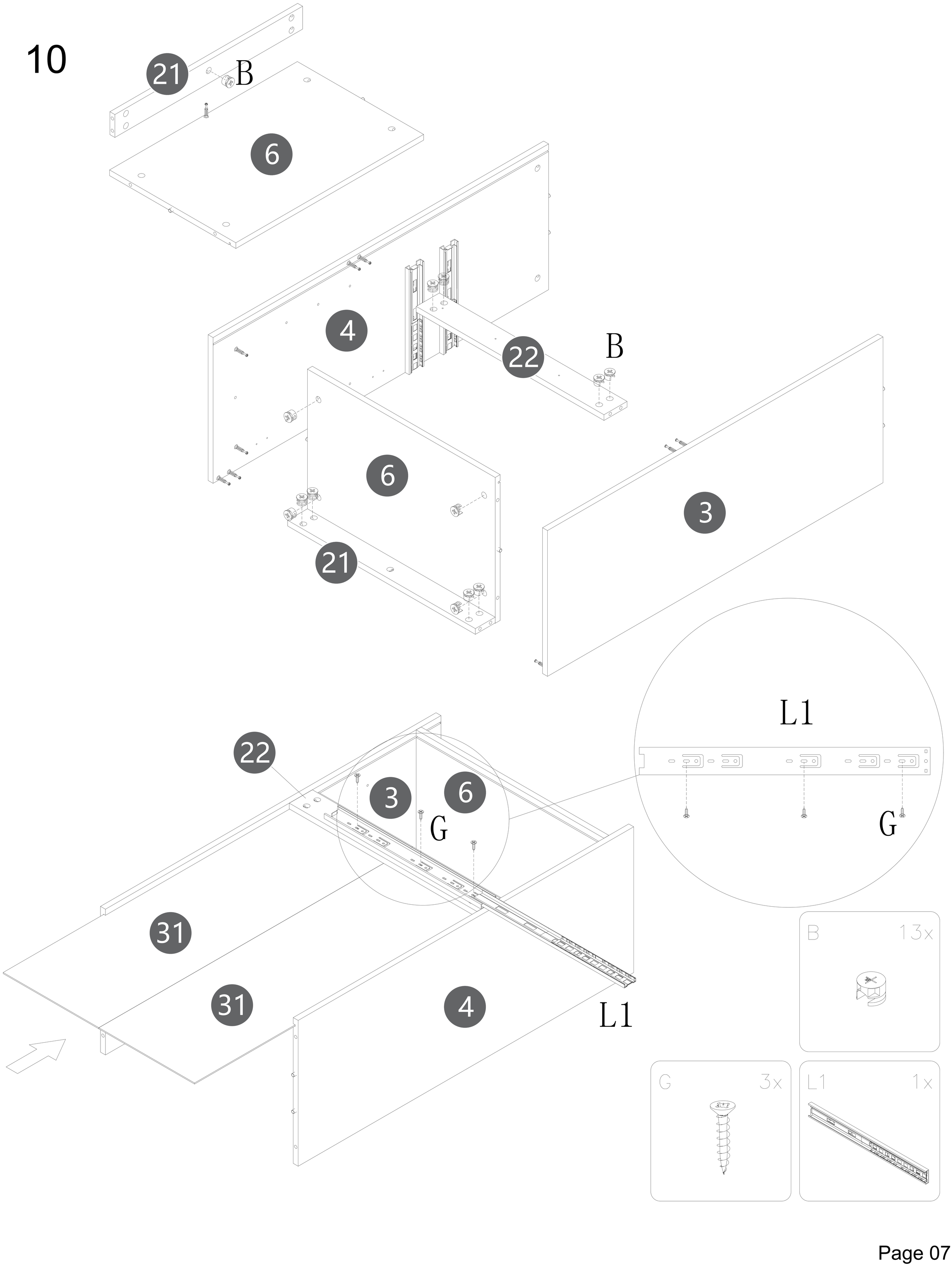

B 13x

G 3x

L1 1x

11

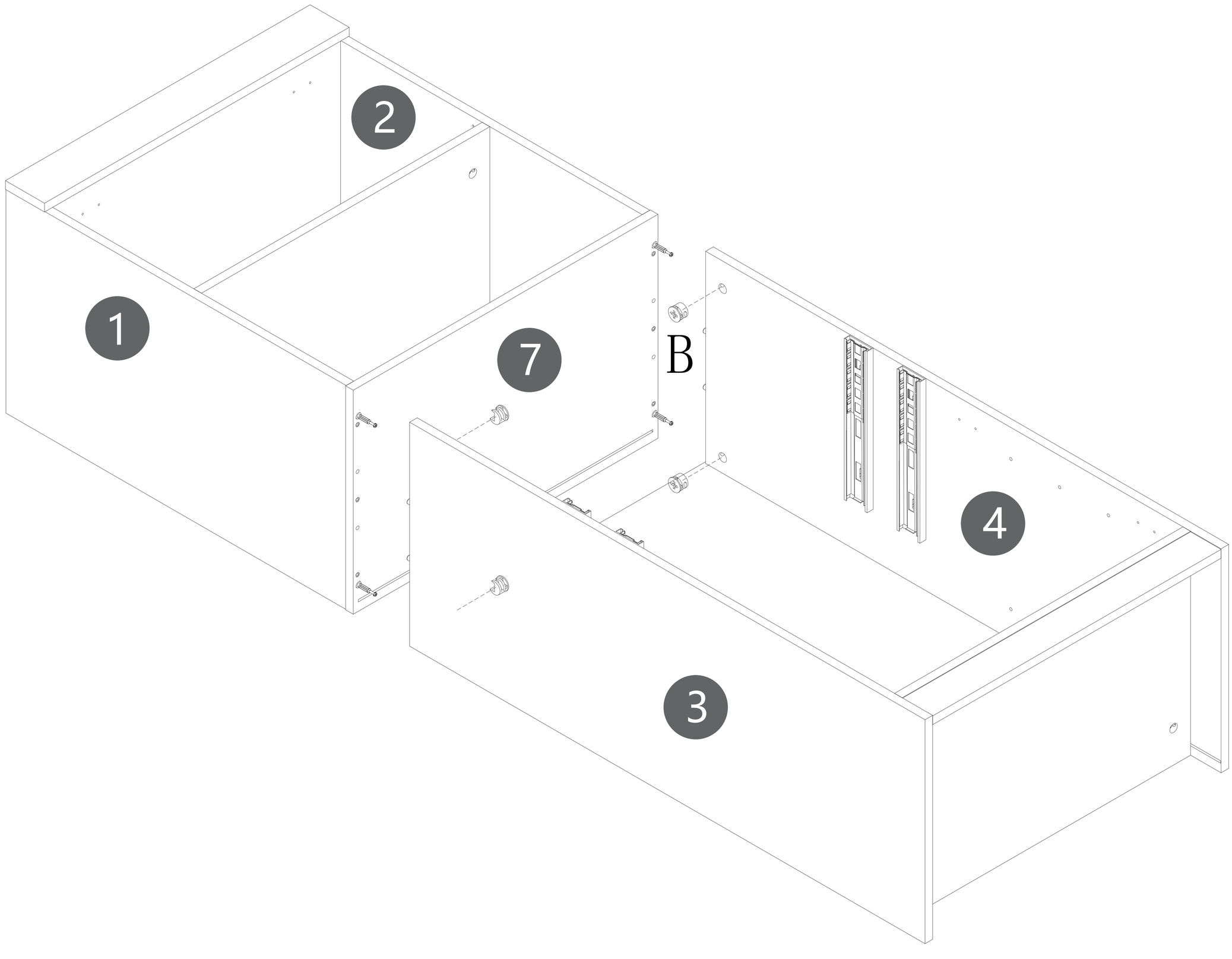

B 4x



12

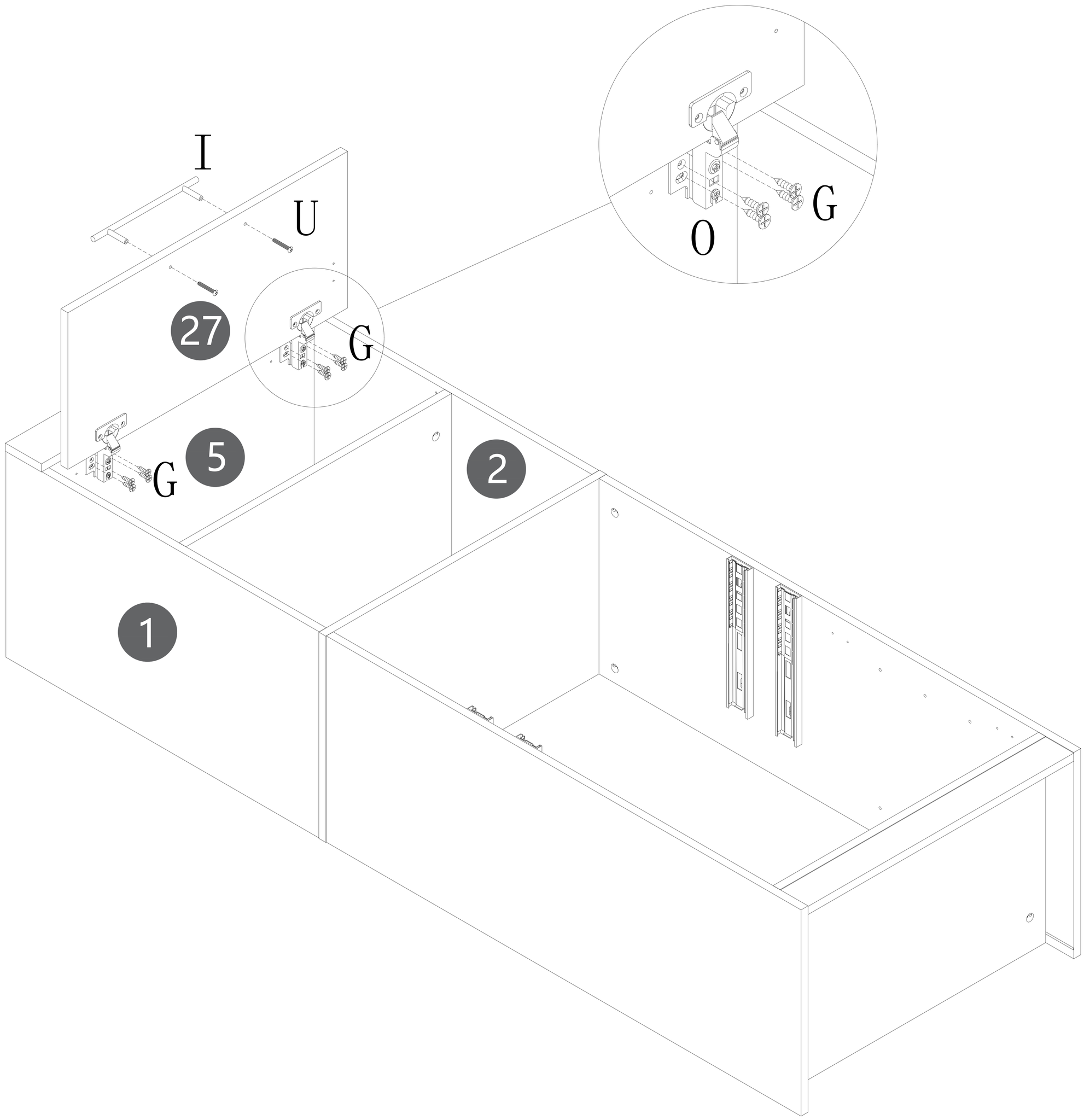

G 8x

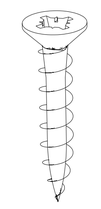

I 1x

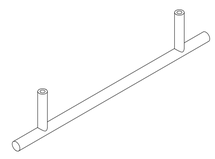

U 2x

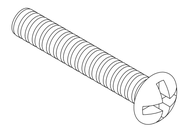

13

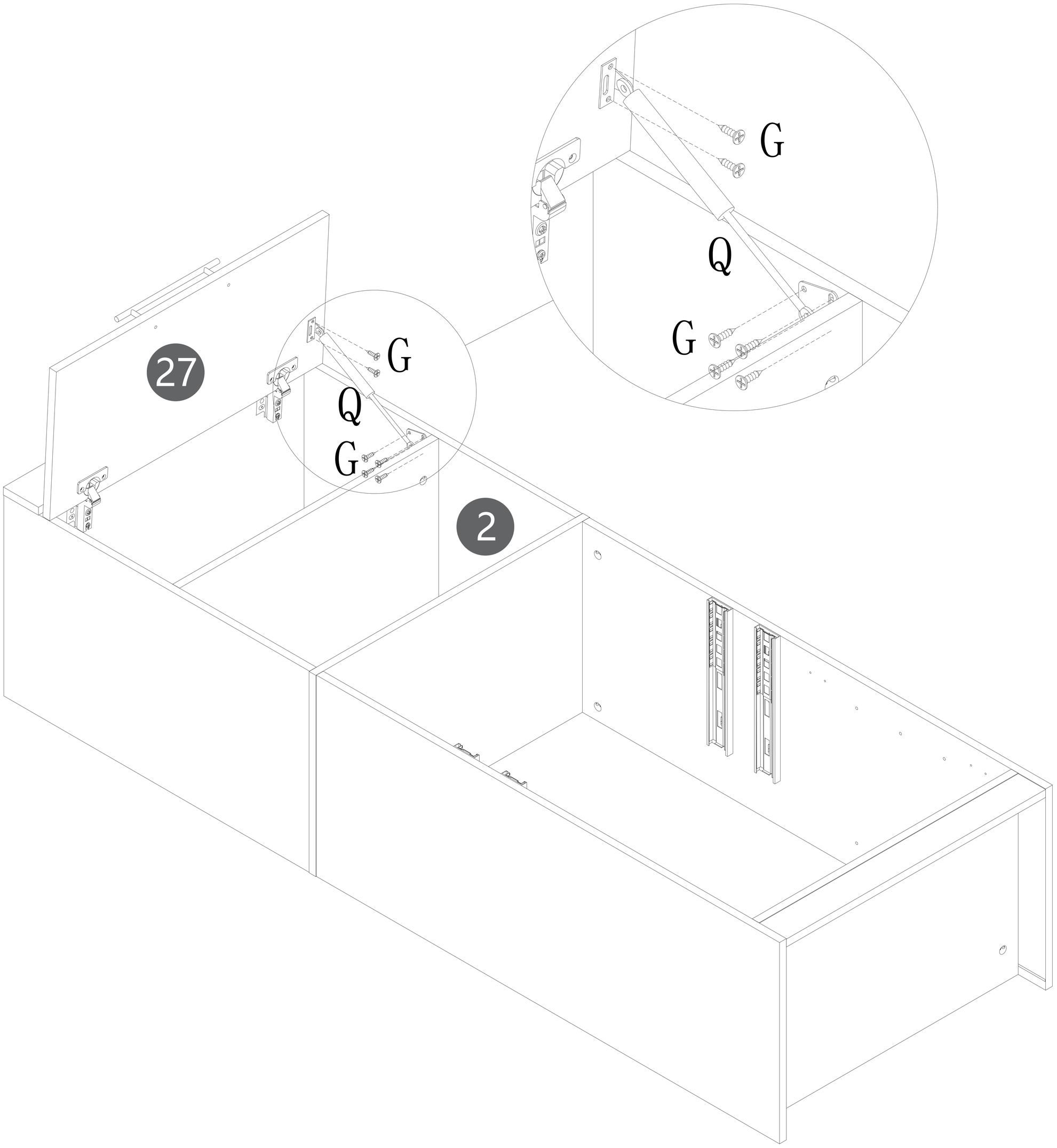

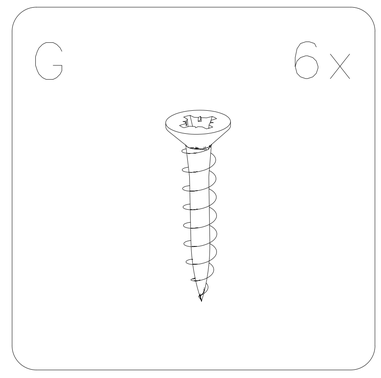

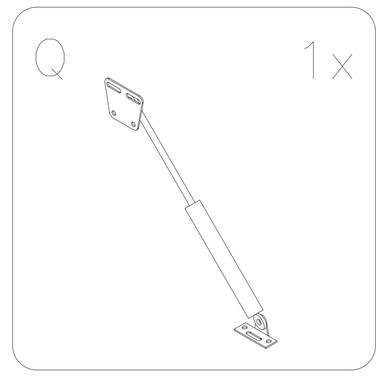

14

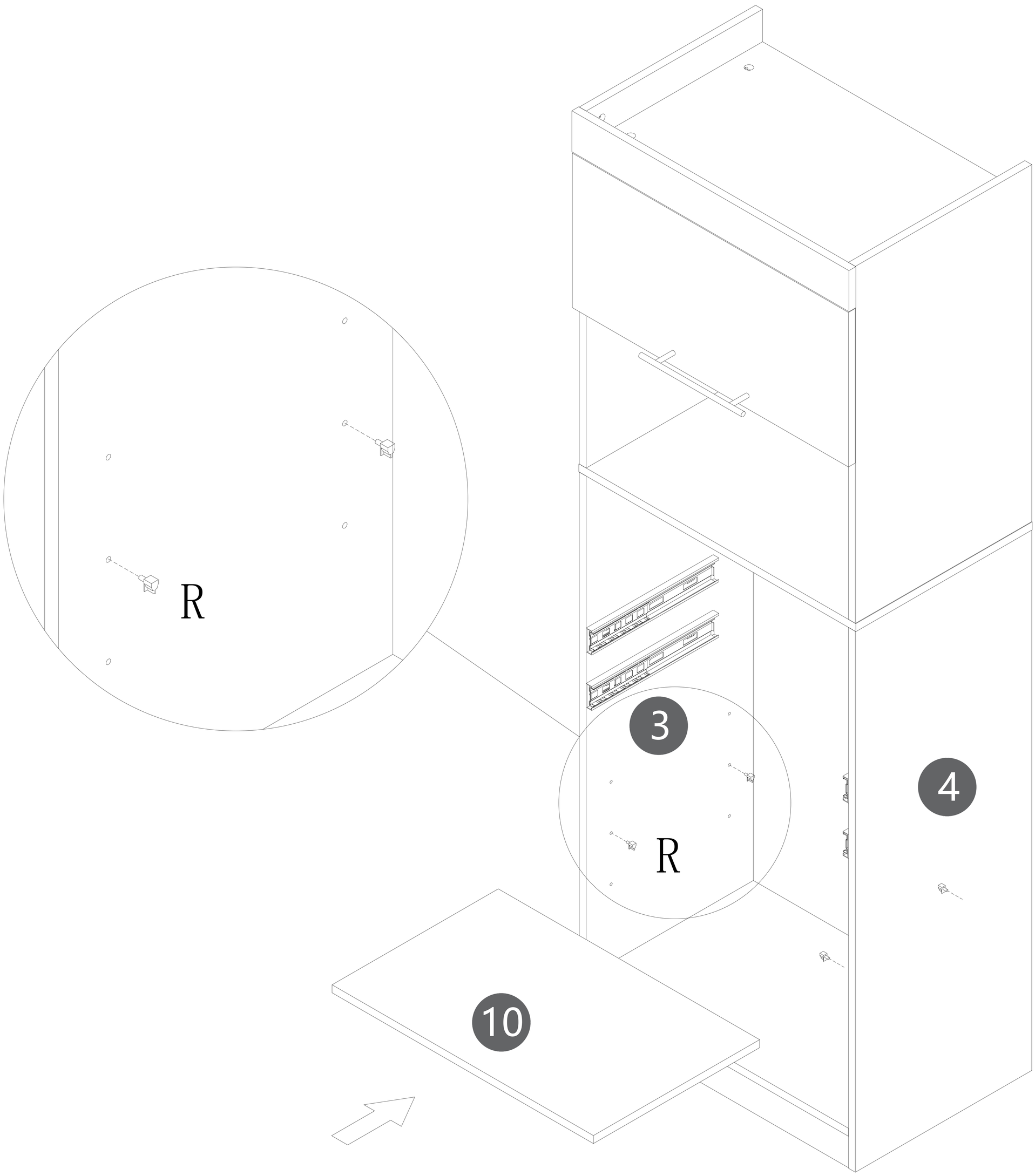

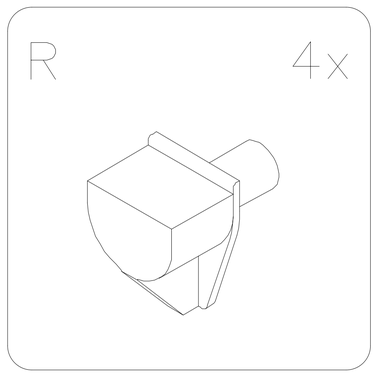

15

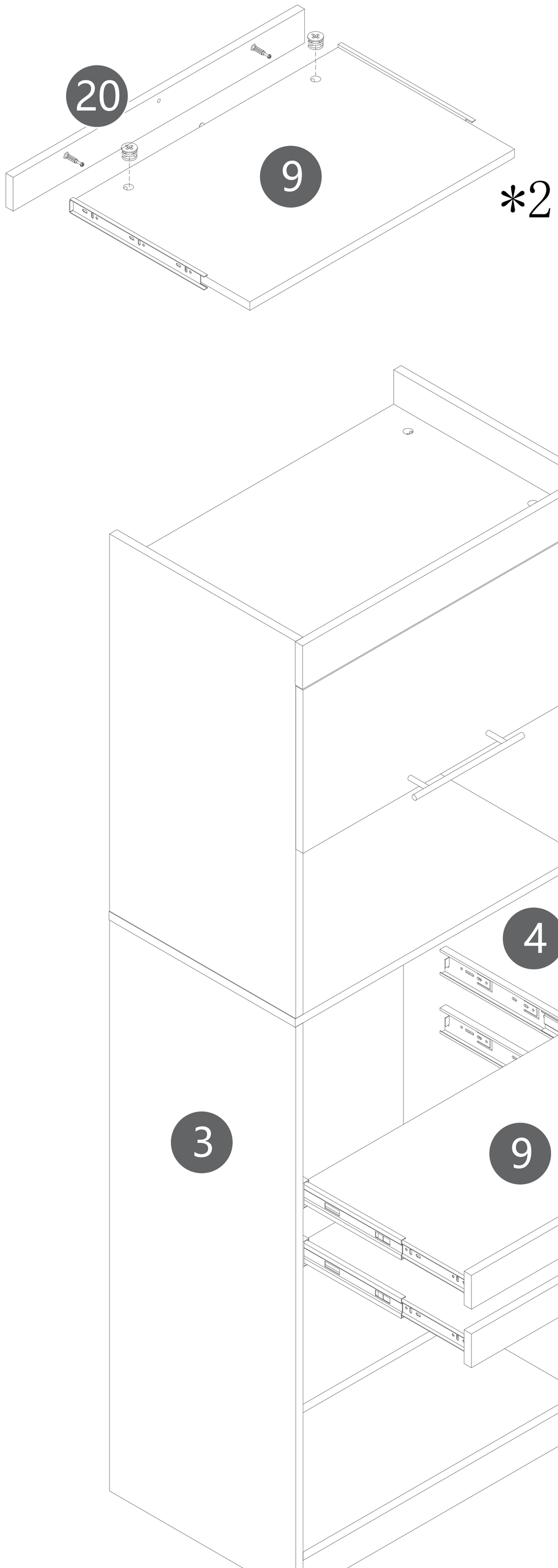

B 4x

16

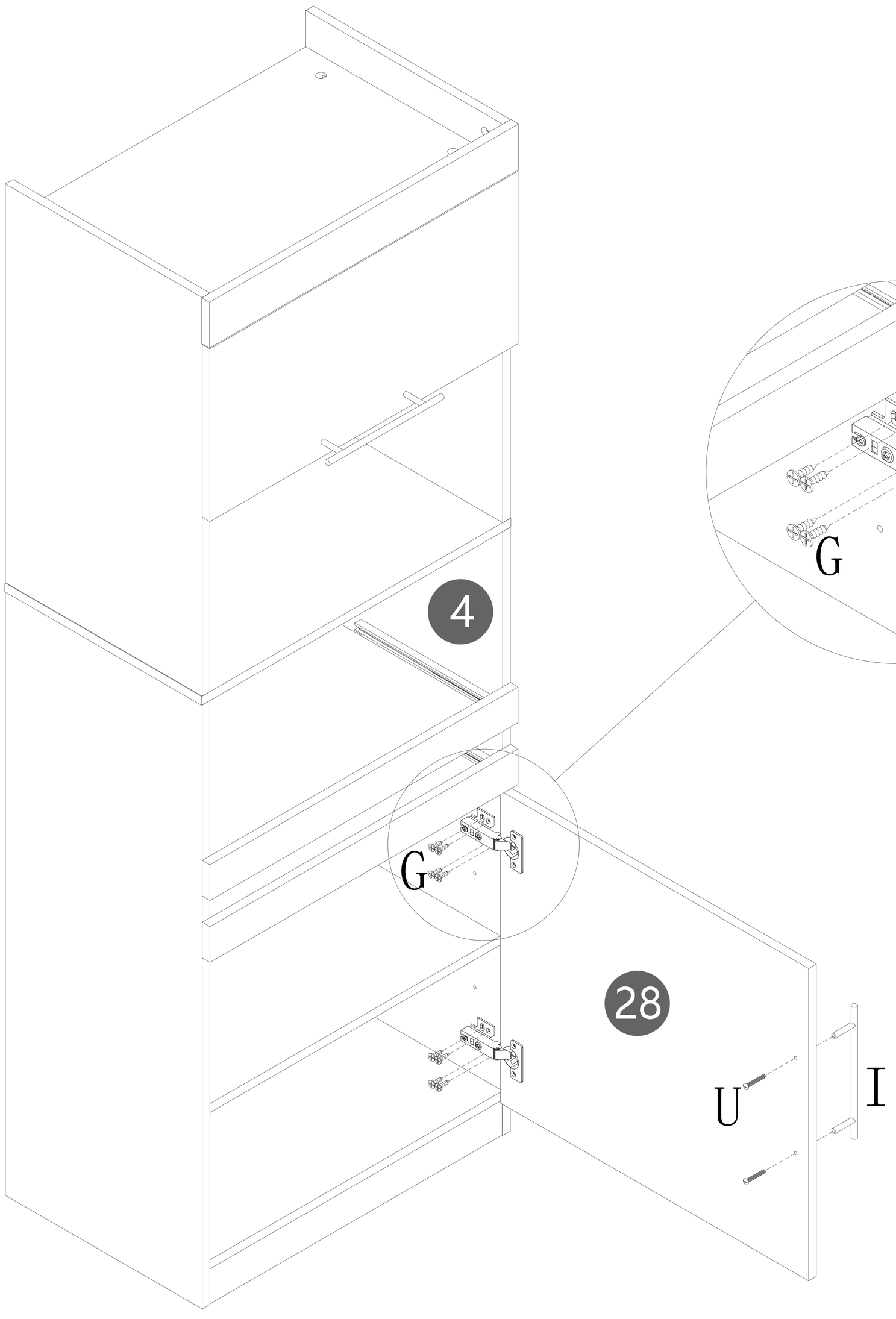

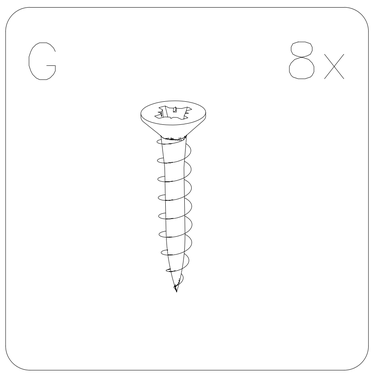

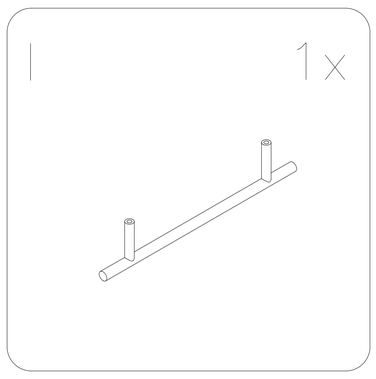

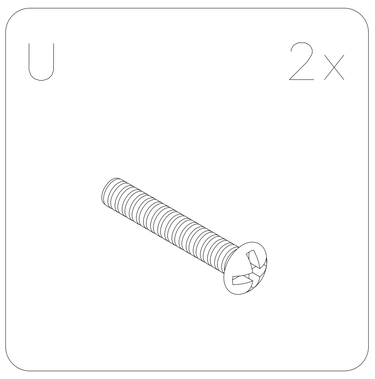

17

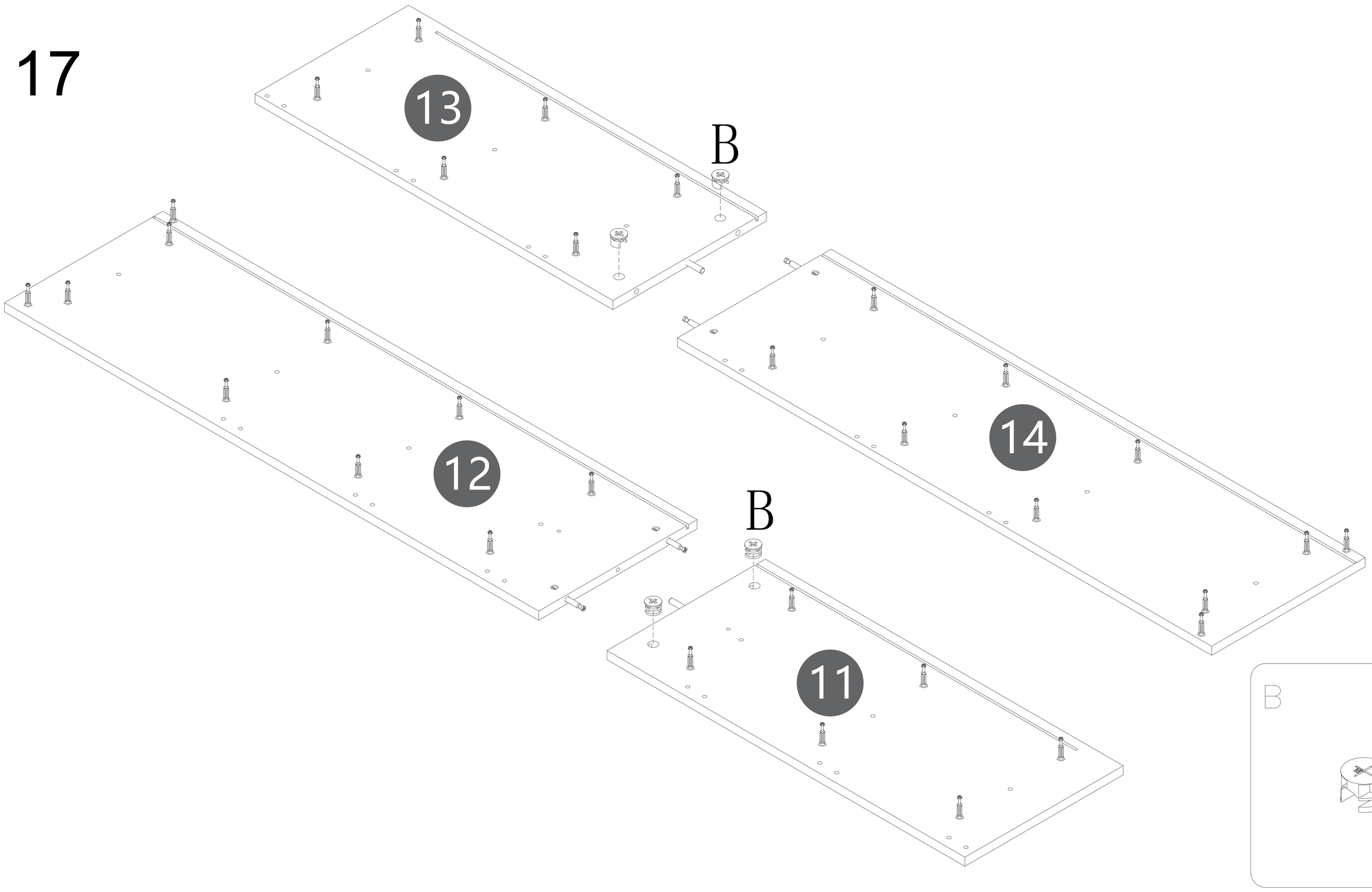

B 4x

18

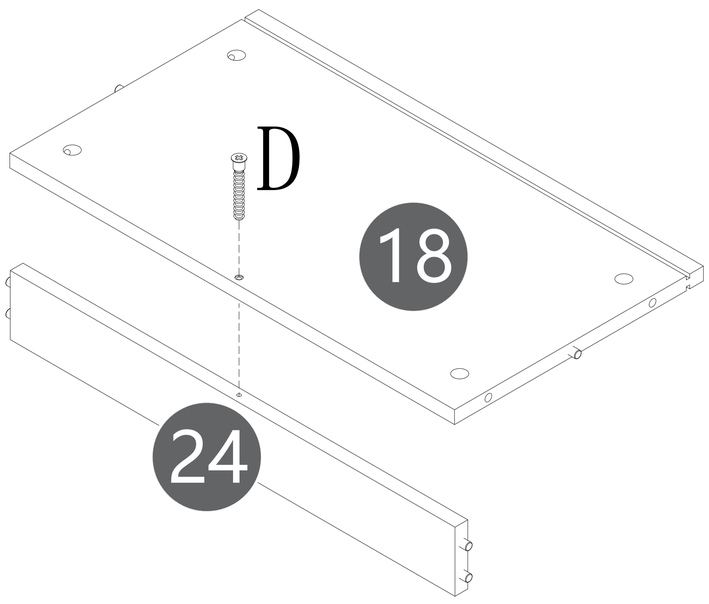

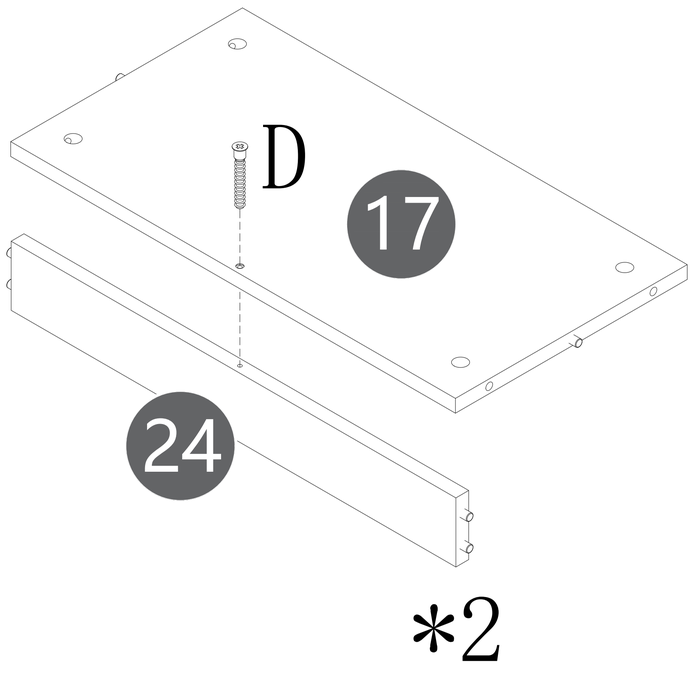

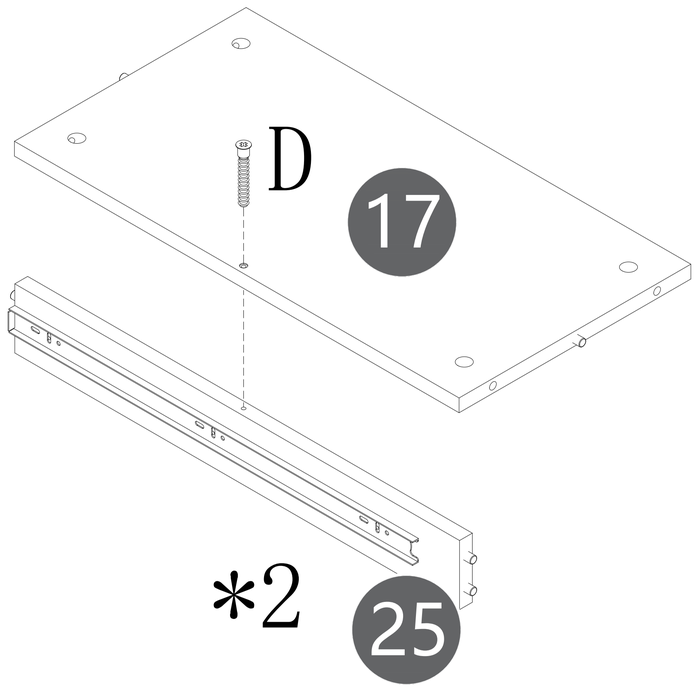

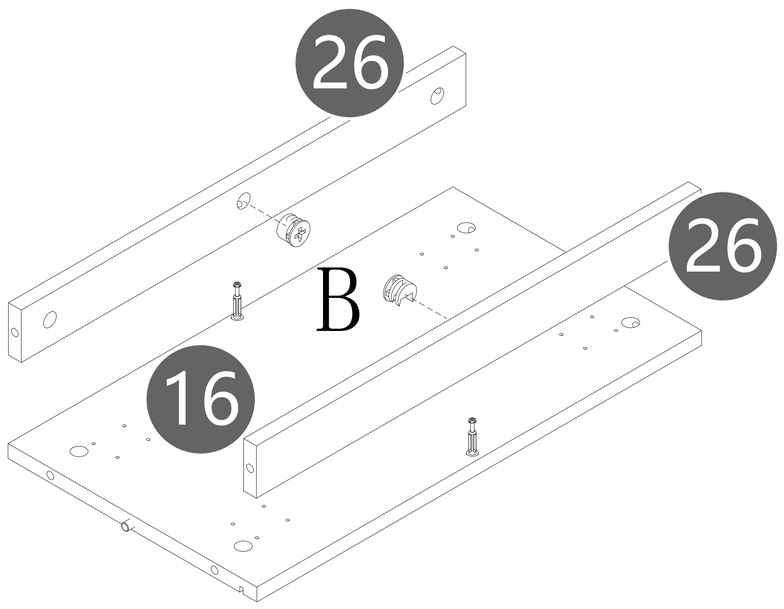

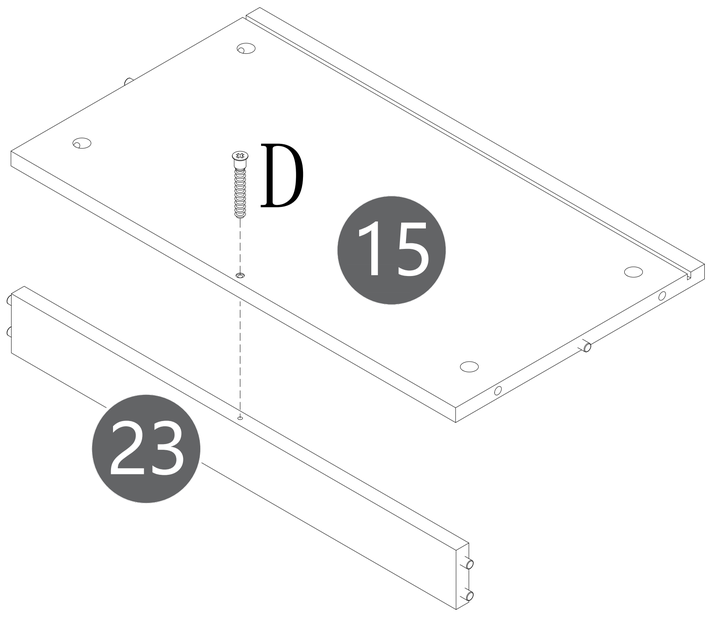

B 2x



D 6x

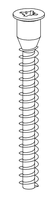

19

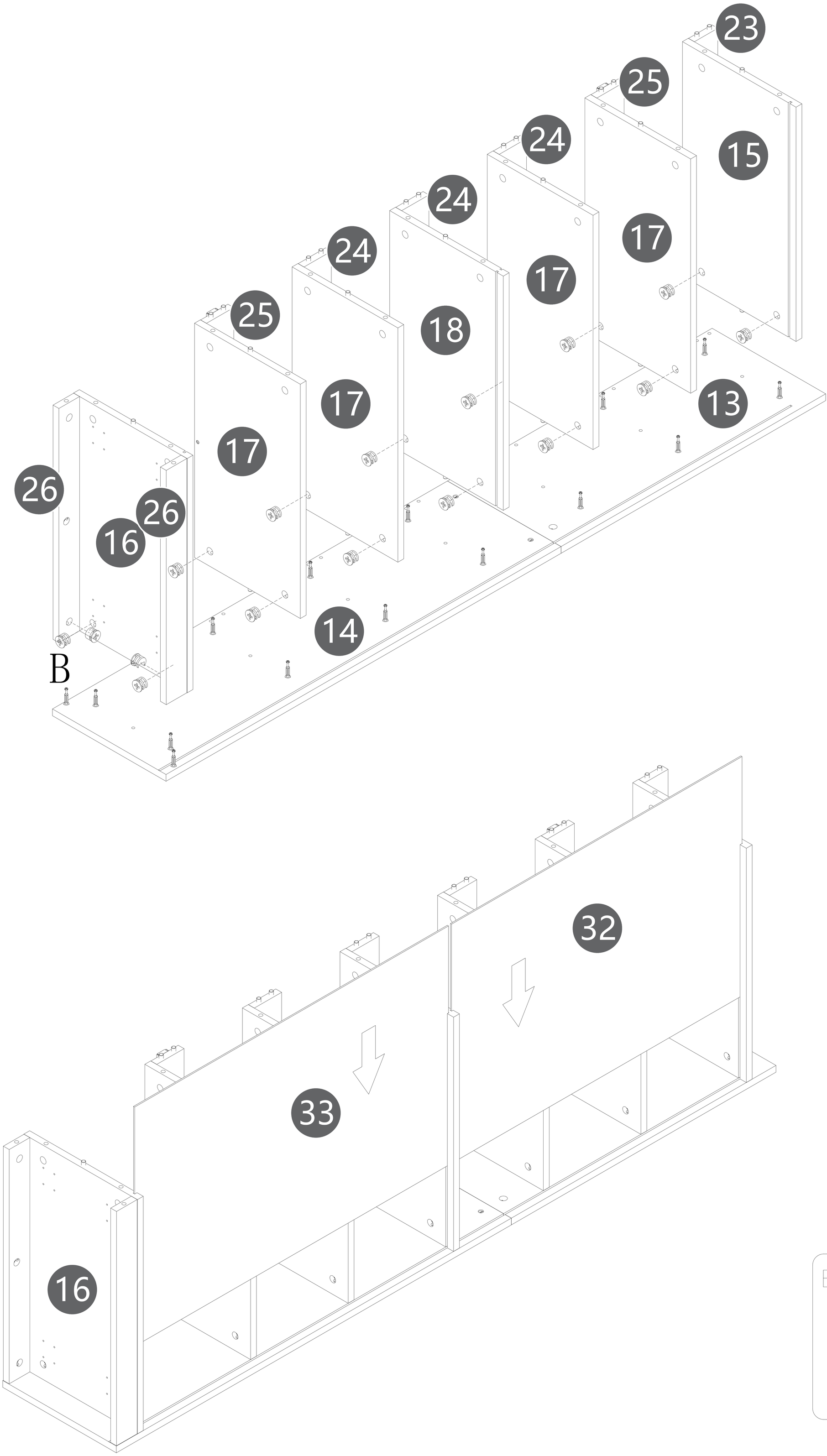

B 16x



20

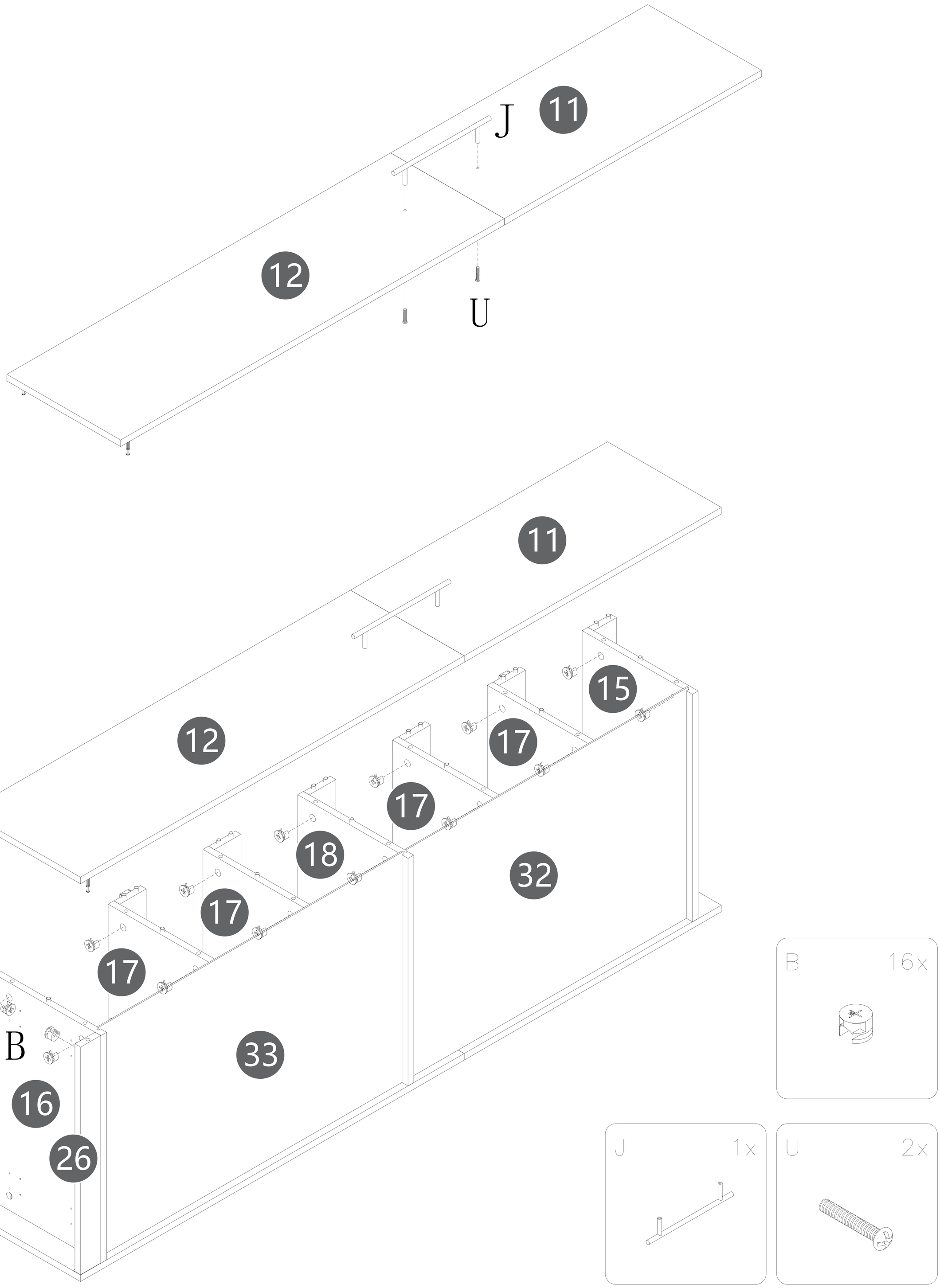

B 16x

J 1x

U 2x

21

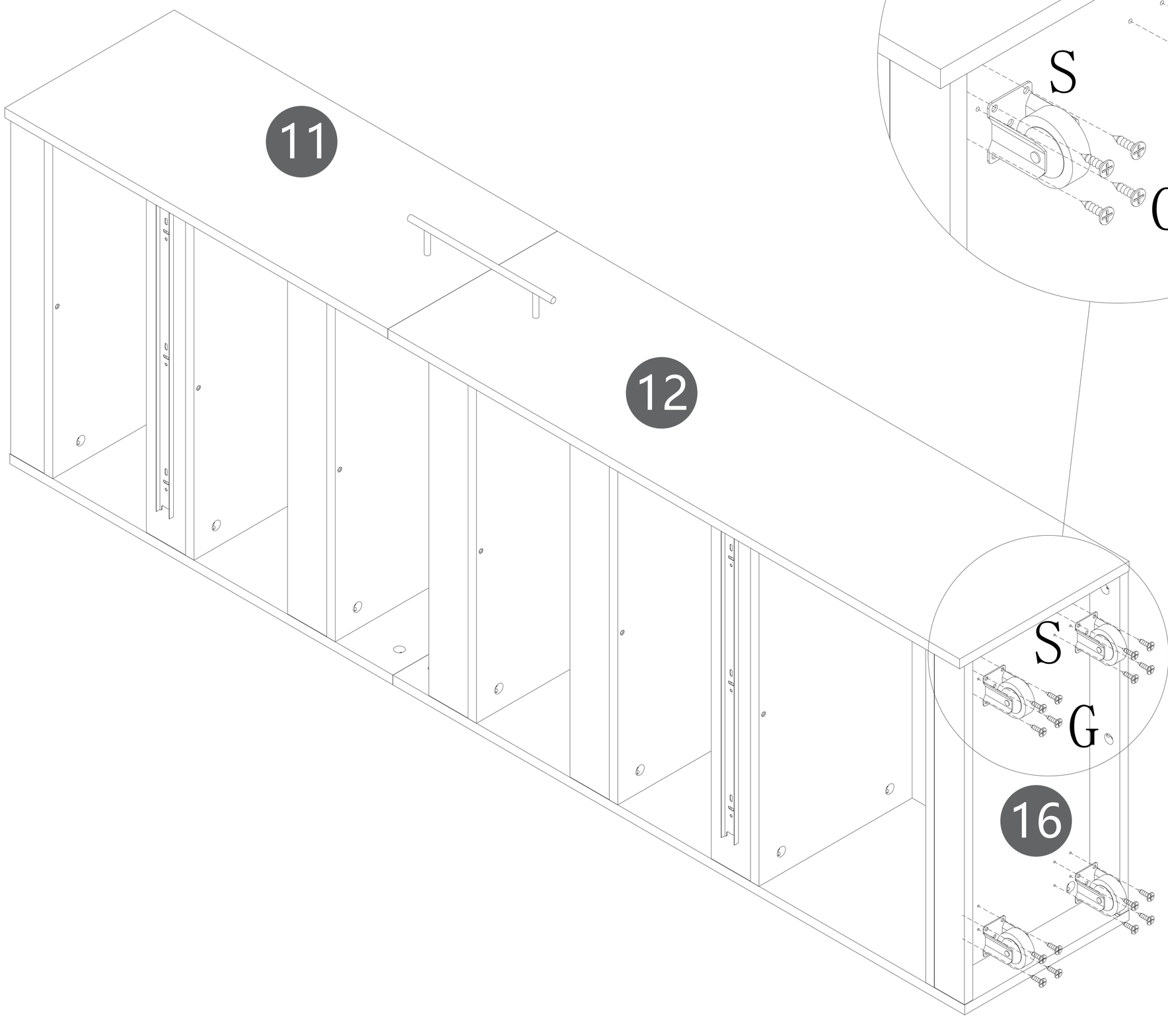

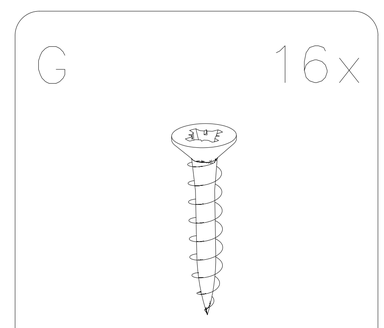

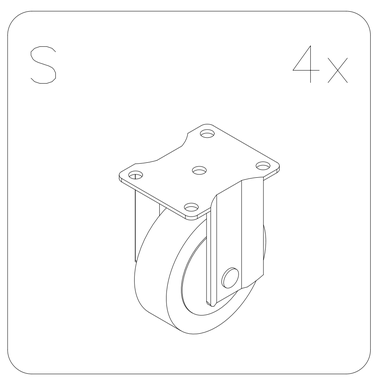

22

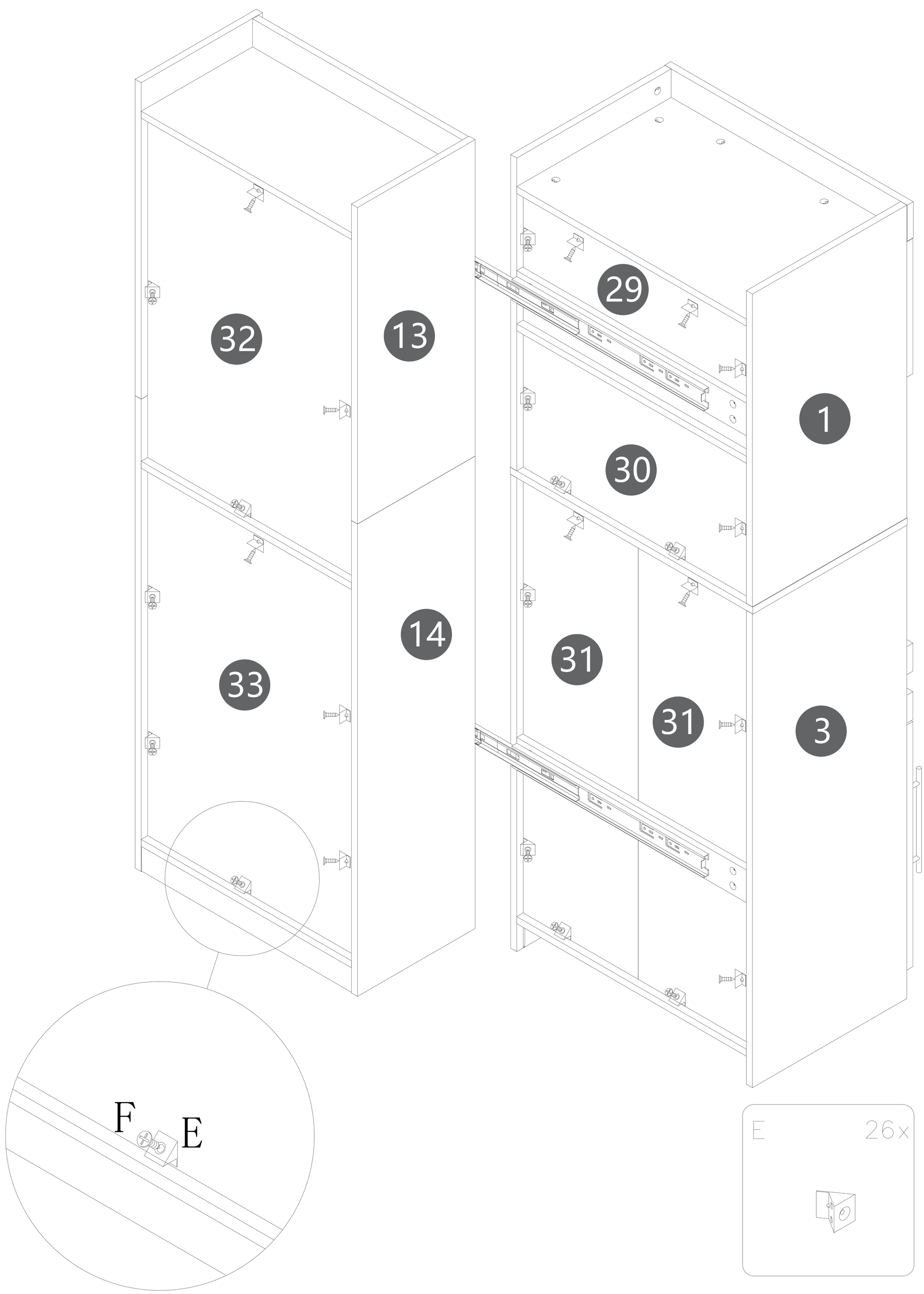

E 26x

F 26x

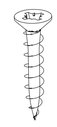

23

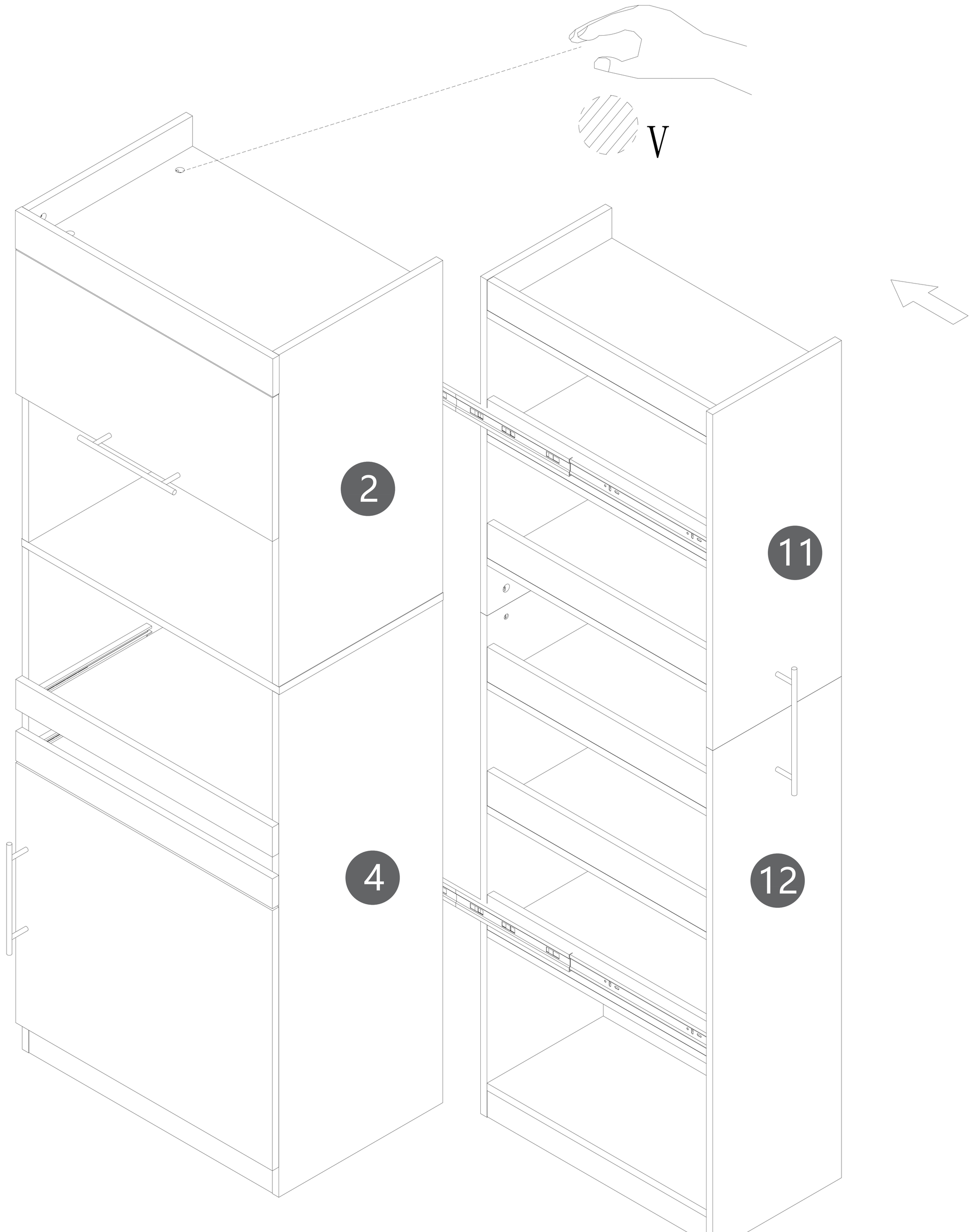

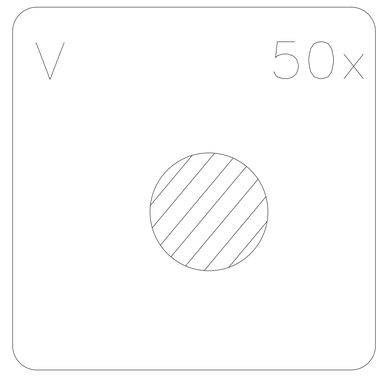

24

