INSTRUCTION MANUAL

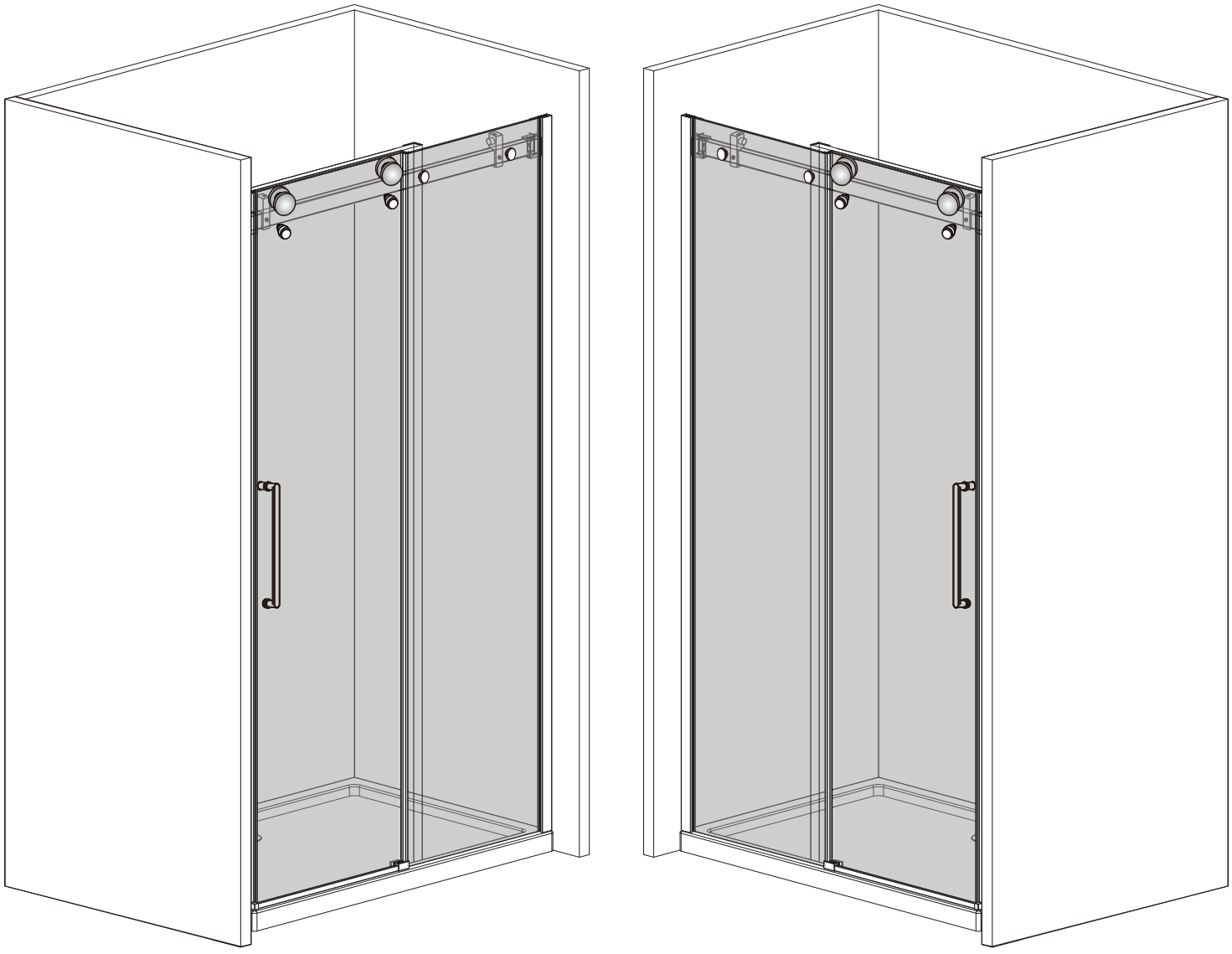

PF-100	1524X1524MM	60"X60"
PF-100	1524X1930MM	60"X76"

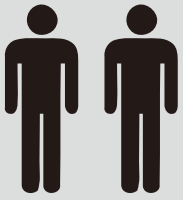

Need two person

Please keep this manual and product code number for future reference and for ordering replacement parts if necessary.

GENERAL INSTRUCTIONS

Read this manual carefully and completely before proceeding.

.It is recommended that you wear safety glasses at all times during the installation.

INSTALLATION OVER CERAMIC TILES

If your shower door is to be installed over ceramic tiles,the tiles should lay completely under the wall jamb.Silicone ·should be used to seal the gap where the ceramic tiles meet the fixed panel.

NOTICE

.Caulking: no sealant is required inside the shower,unless otherwise stated.

.Some models are equipped with clear sealing gaskets.

CARE FOR YOUR SHOWER DOOR

Never use scouring powder pads or sharp instruments on metal pieces or glass panels.

An occasional wiping down with a mild soap diluted in water is all that is needed to keep the panels and aluminum parts looking new.

.We recommend wiping the glass panels with a squeegee after each use.

Product specifications are subject to change without notice

CHOOSE CONFIGURATION

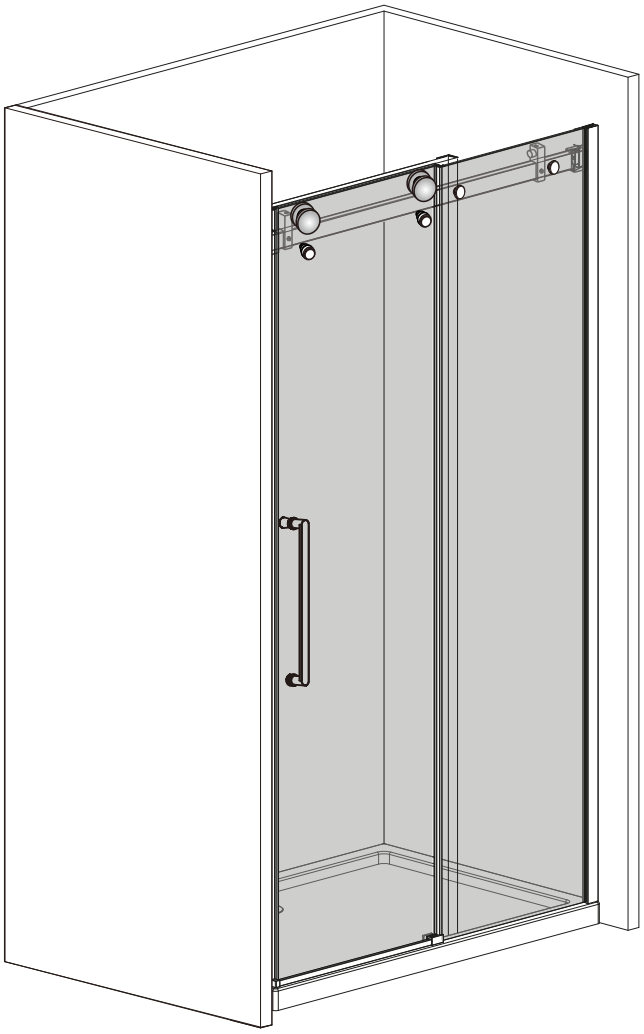

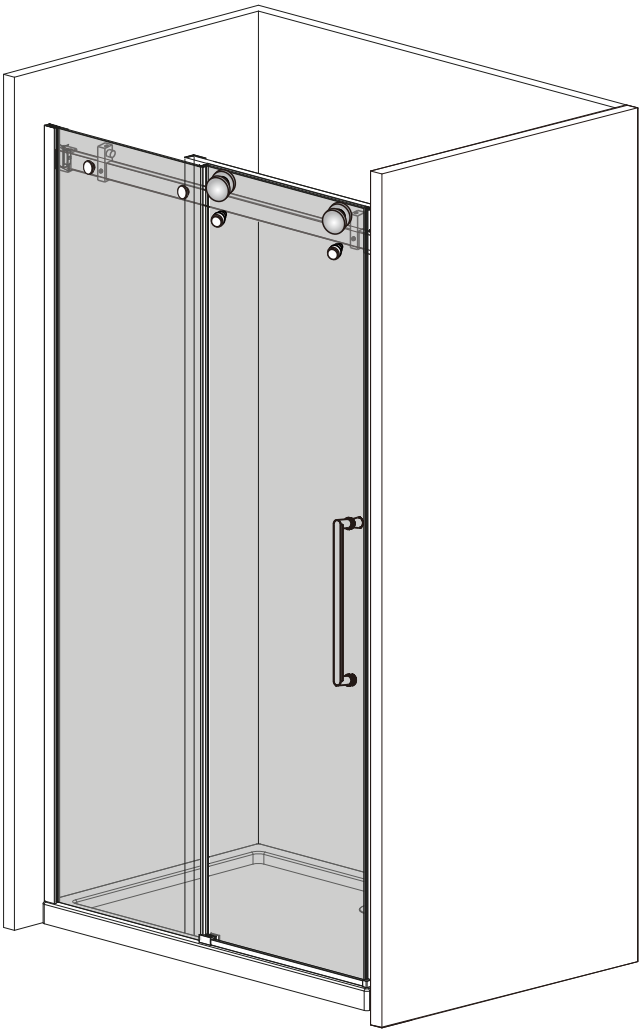

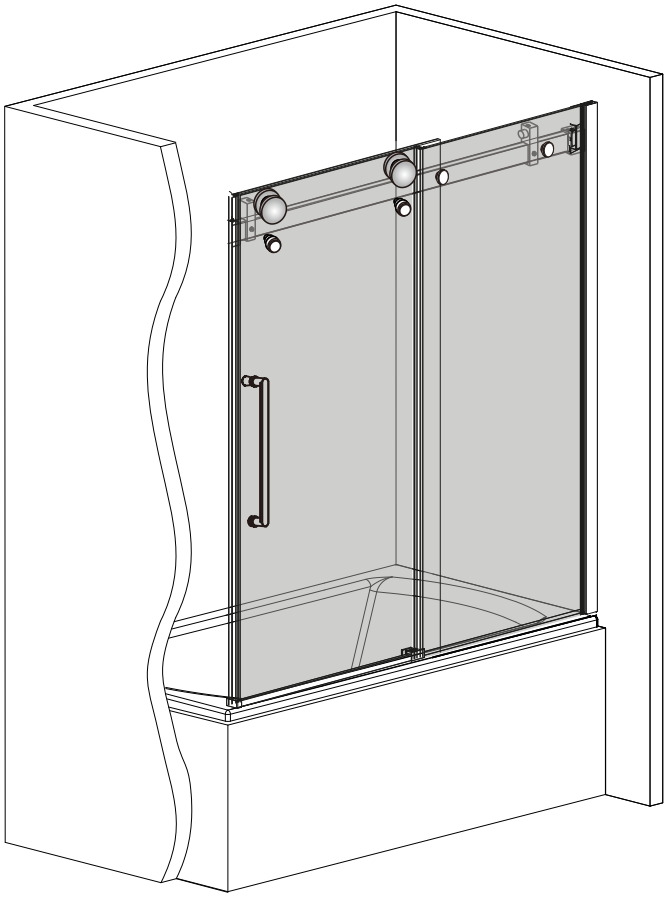

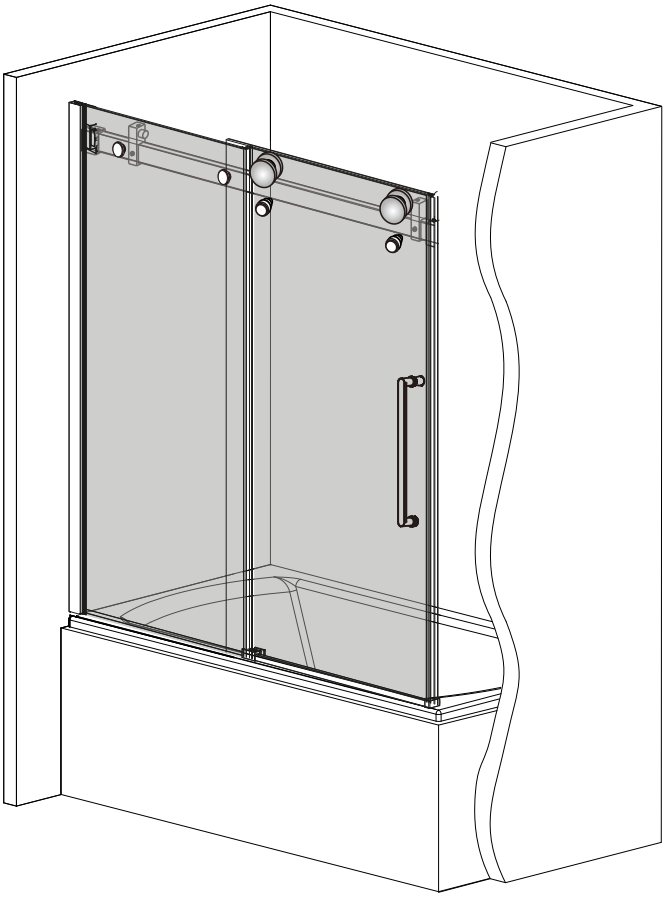

PARTS LISTING

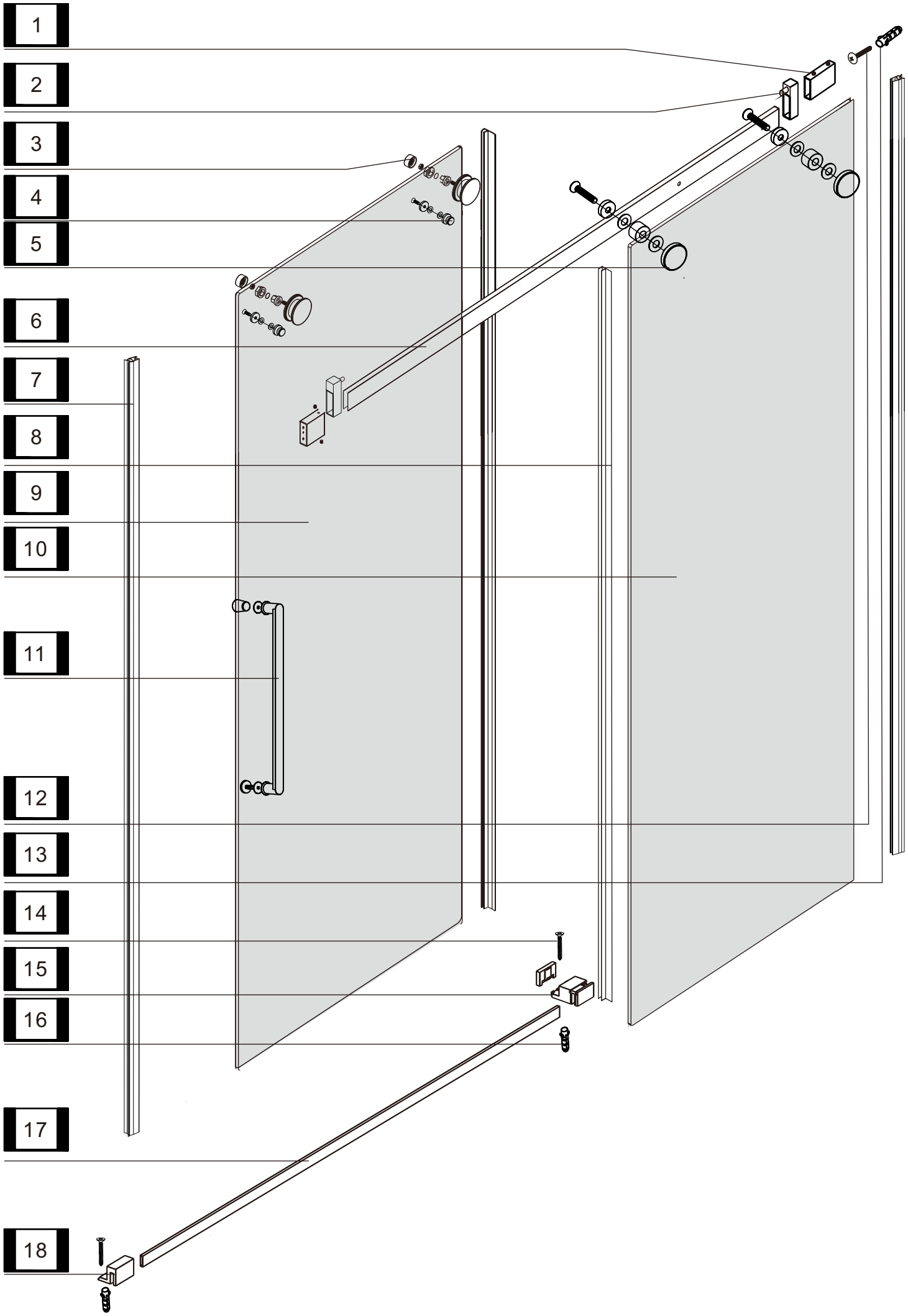

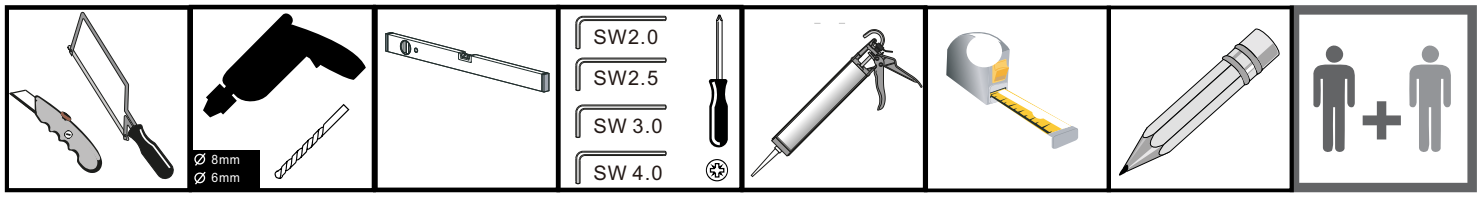

◆ Box Contents

Item	Prats	Photo	Qty
1	Stainless Steel Wall Bracket	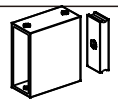	2
2	Stainless Steel Positioning Block	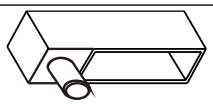	2
3	Roller	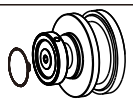	2
4	Glass Anti-Jump Clip	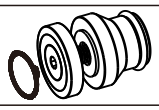	2
5	Fixed Glass Clamp Set	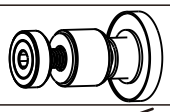	2
6	Stainless Steel Crossbar (40x10mm)	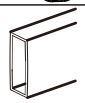	1
7	Waterproof Sealing Gasket [Door Seal]	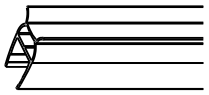	2
8	F-Shaped Water Barrier		2
9	Movable Glass Panel	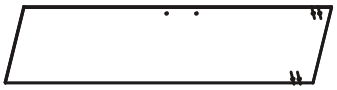	1
10	Fixed Glass Panel	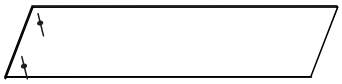	1
11	Stainless Steel Pull Handle		1
12	Round Head Screw (5x35mm)	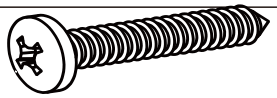	2
13	Wall Plug / Anchor (Ø8mm)		2
14	Flat Head Screw (4x30mm)		2
15	Stainless Steel Hinge (41mm Center)	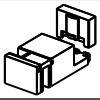	1
16	Wall Plug / Anchor (Ø6mm)		2
17	Bottom Water Guide / Threshold		1
18	Bottom Water Guide Bracket		1

1

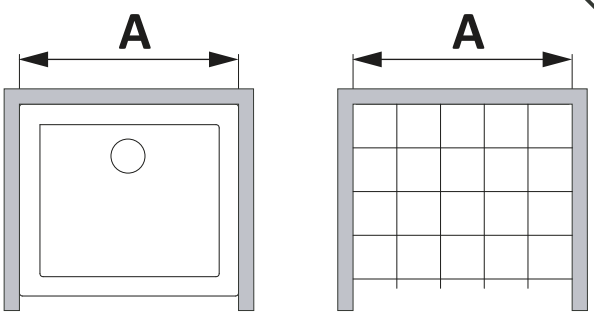

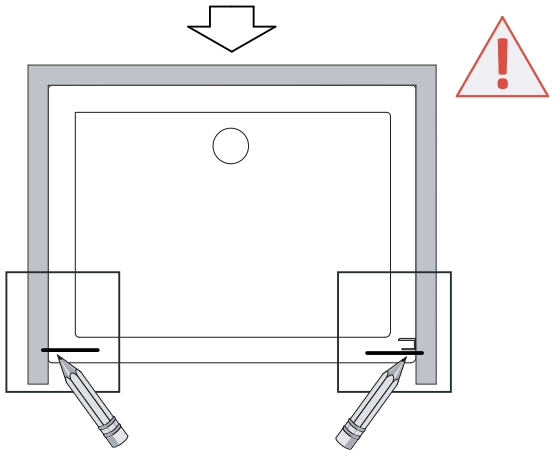

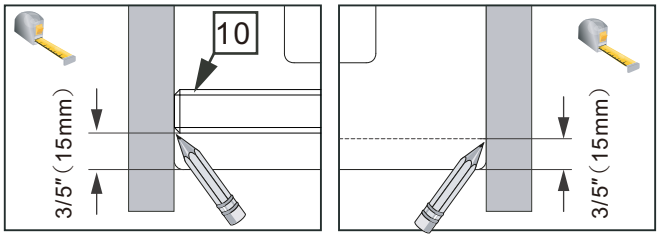

2

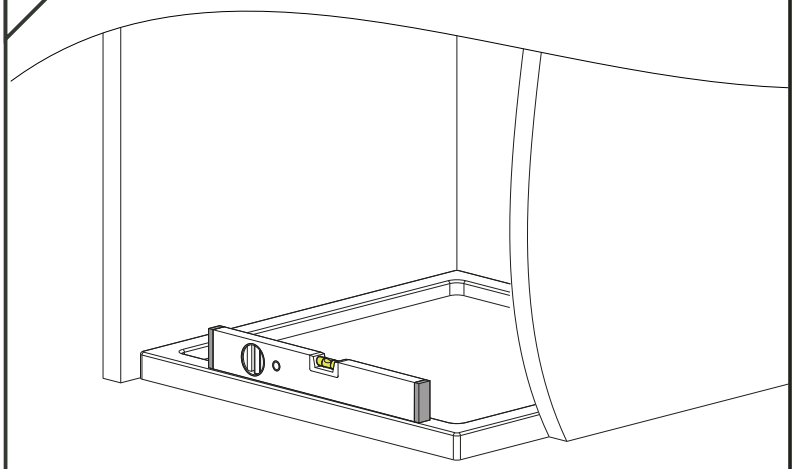

Check if the shower threshold is level using a spirit level or straightedge. If necessary, adjust the threshold until it is perfectly level

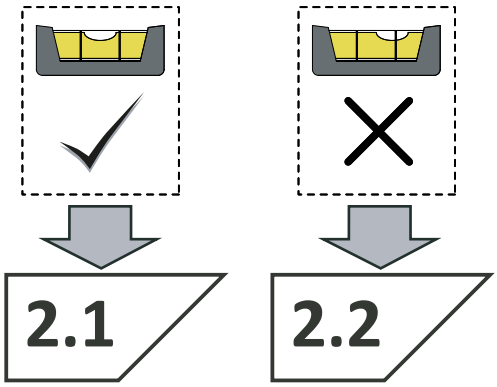

2.1

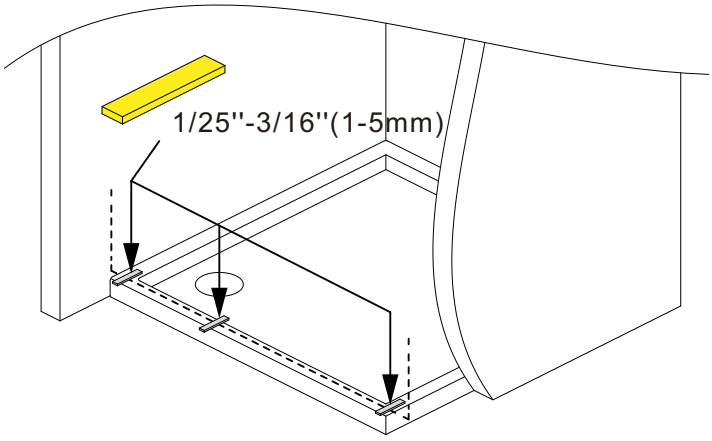

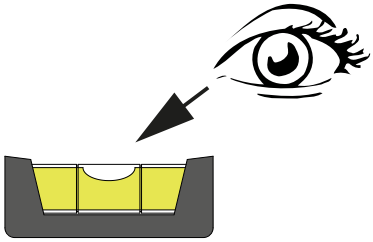

OK

2.2

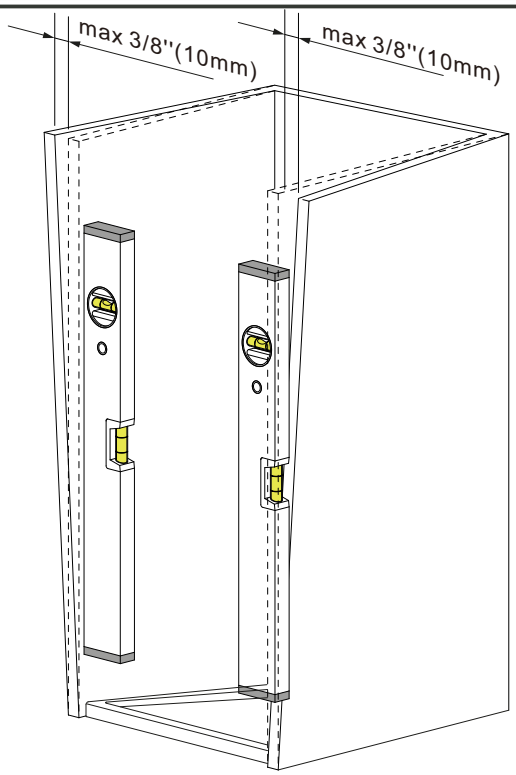

3/8"(10mm)

> 3/8"(10mm) !

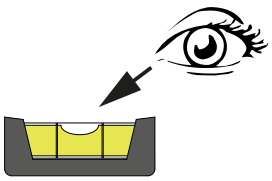

OK

4

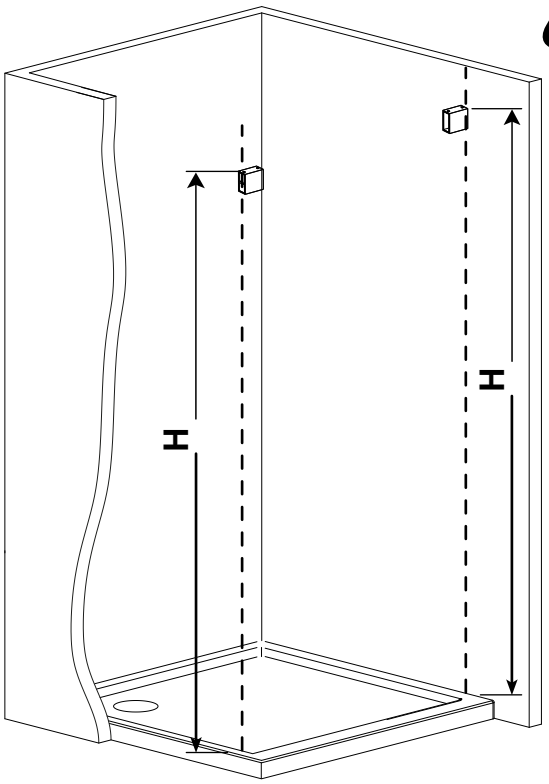

H-55=Total height reduced by 2-11/64″（55mm）

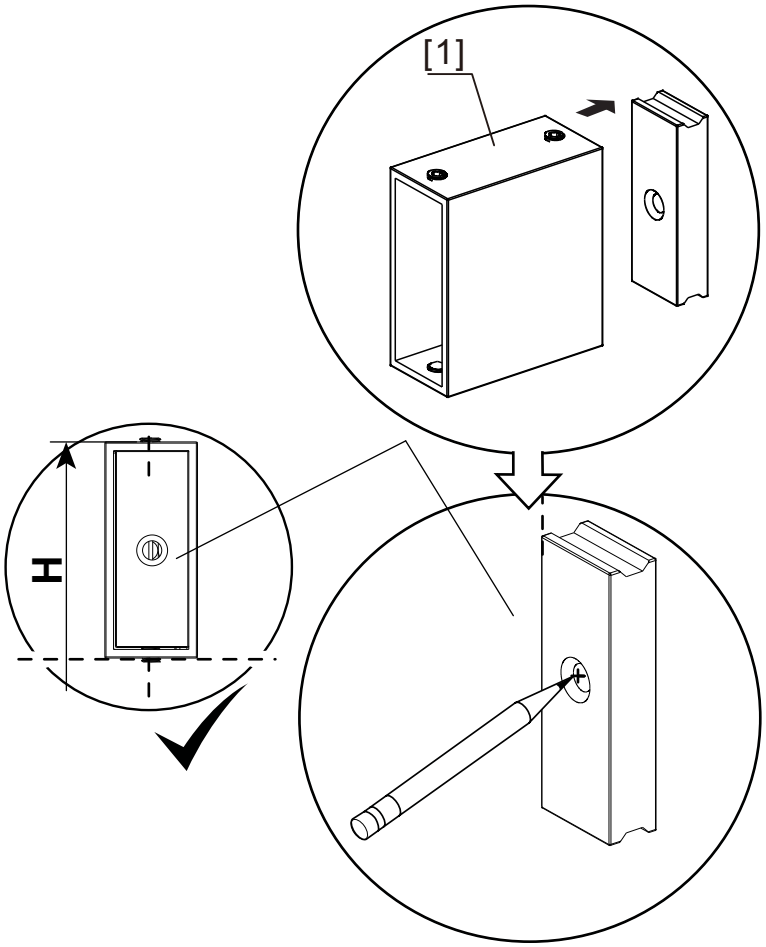

Mark the center hole with a pencil

5

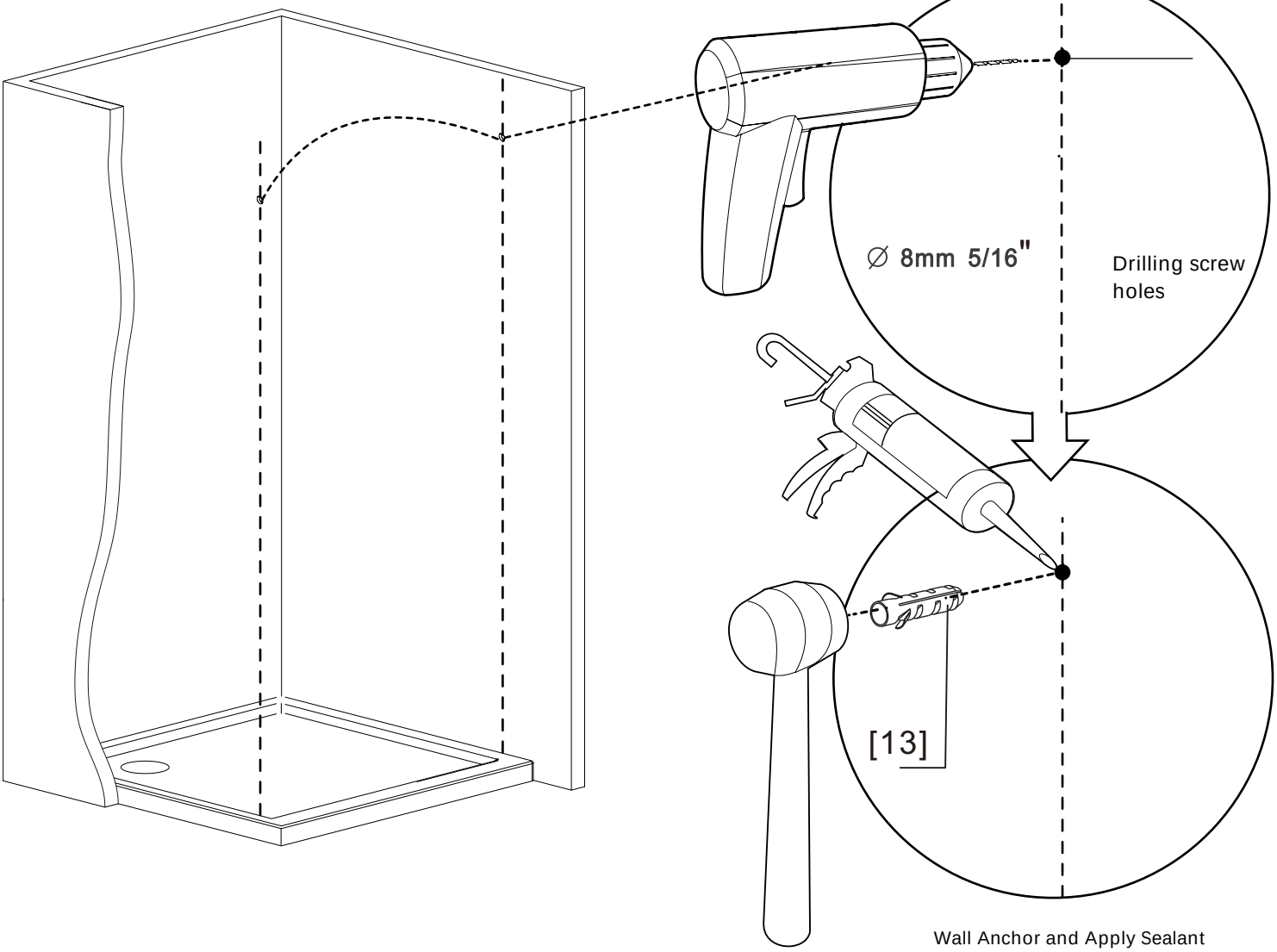

Wall Anchor and Apply Sealant

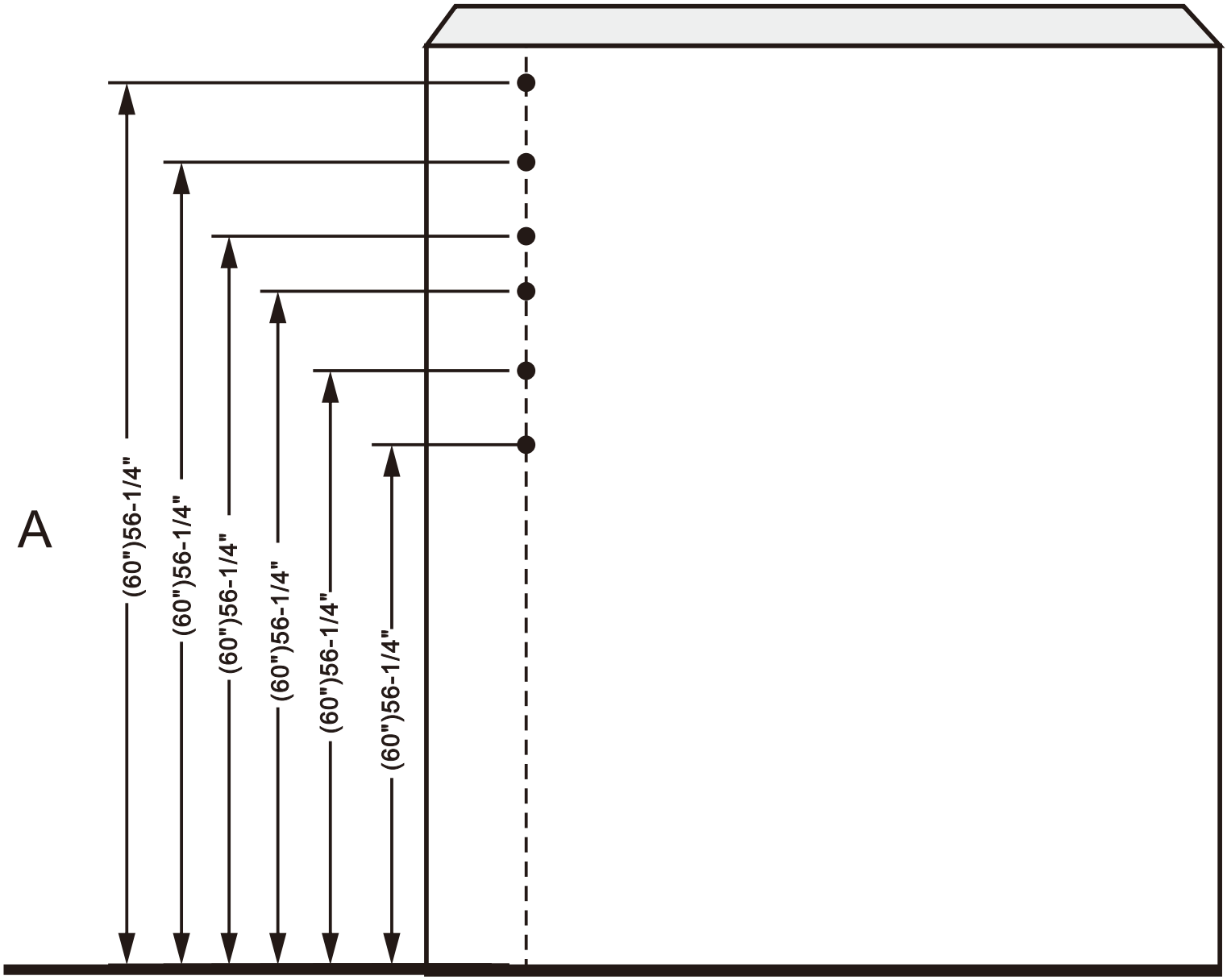

product Height"	Header Height"
(60")	56-1/4"
(66")	62-1/4"
(72")	68-1/4"
(76")	72-1/4"
(79")	75-1/4"
(84")	80-1/4"

6

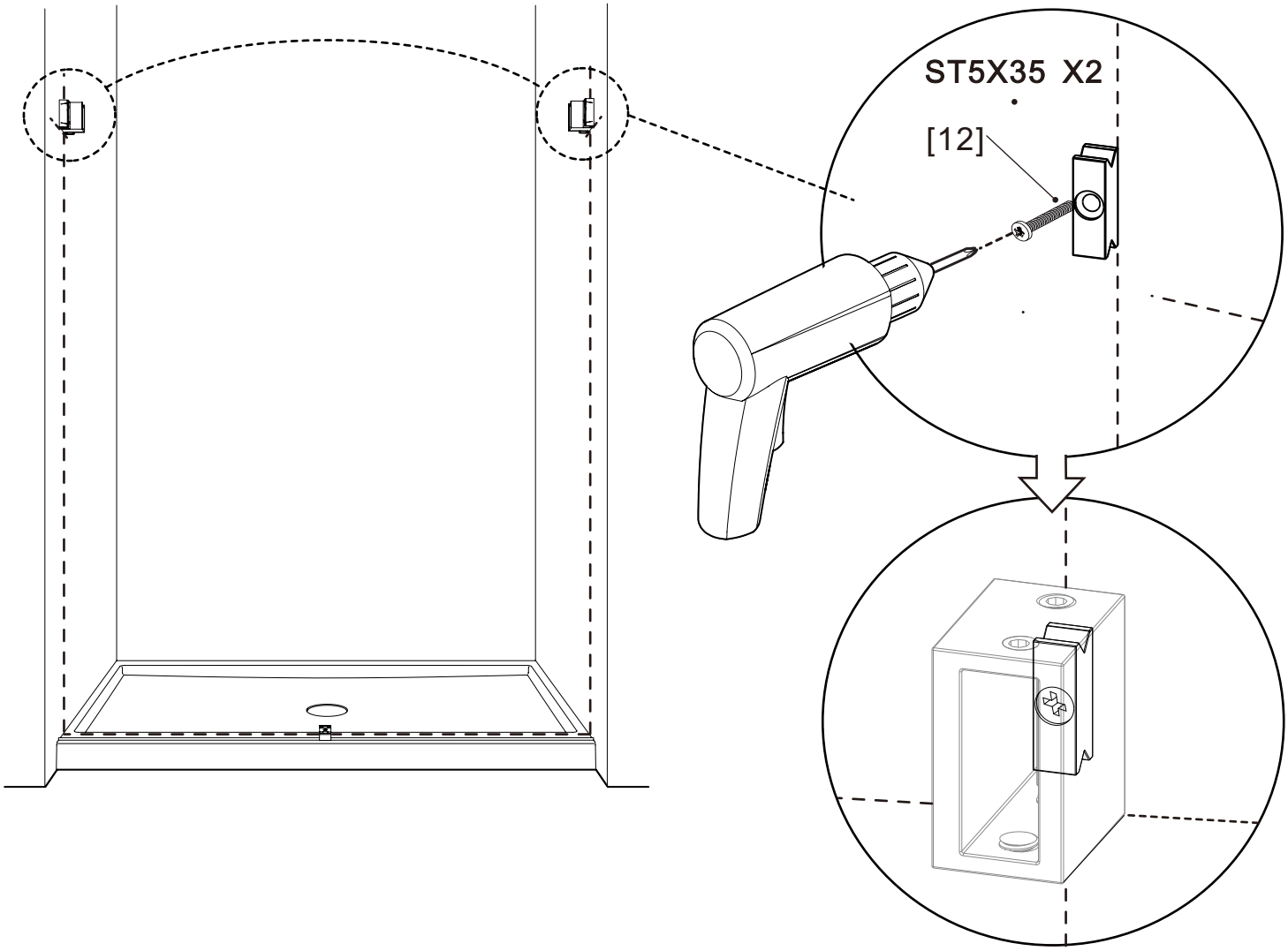
ST5X35 X2
[12]

7

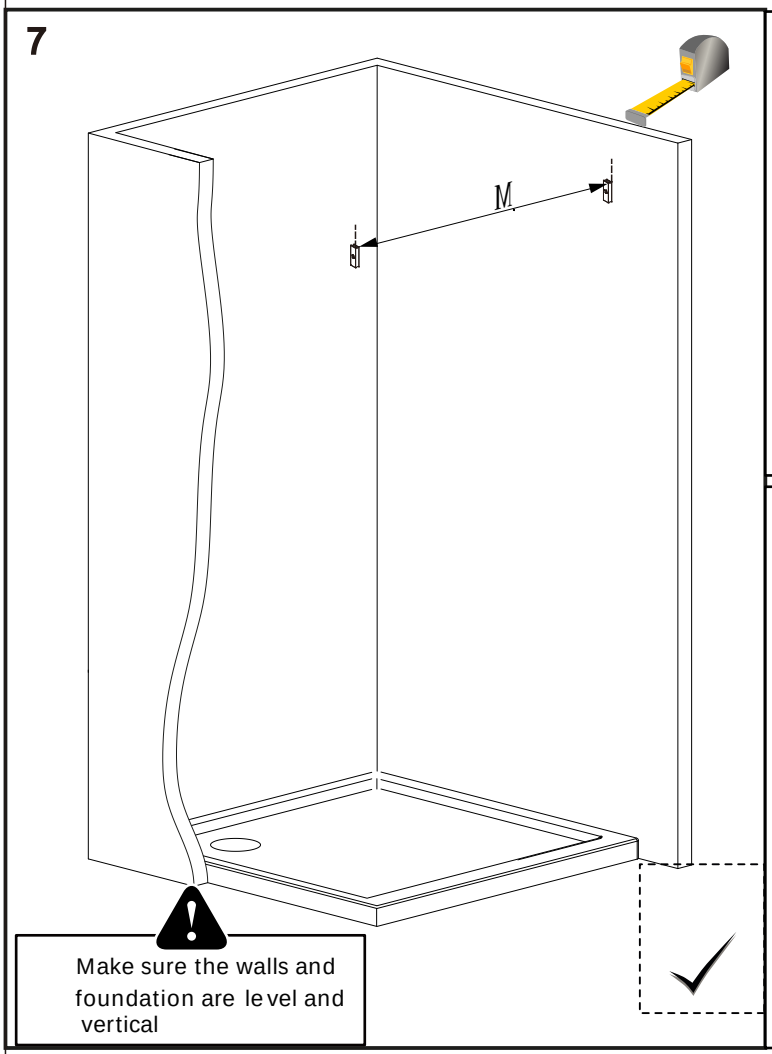
M
Make sure the walls and foundation are level and vertical

7.1

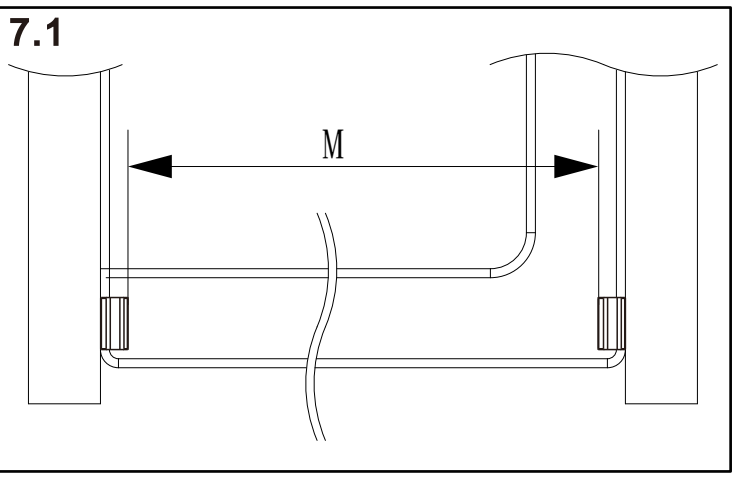
M

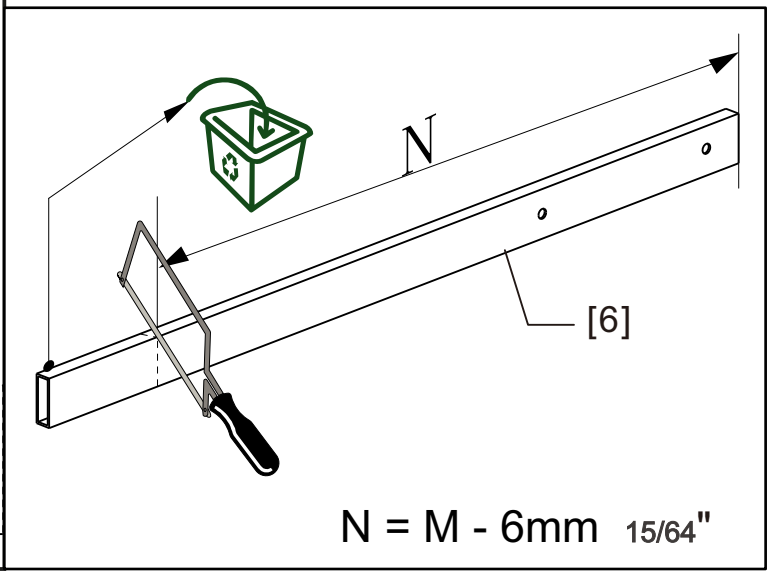
N
[6]
N = M - 6mm 15/64"

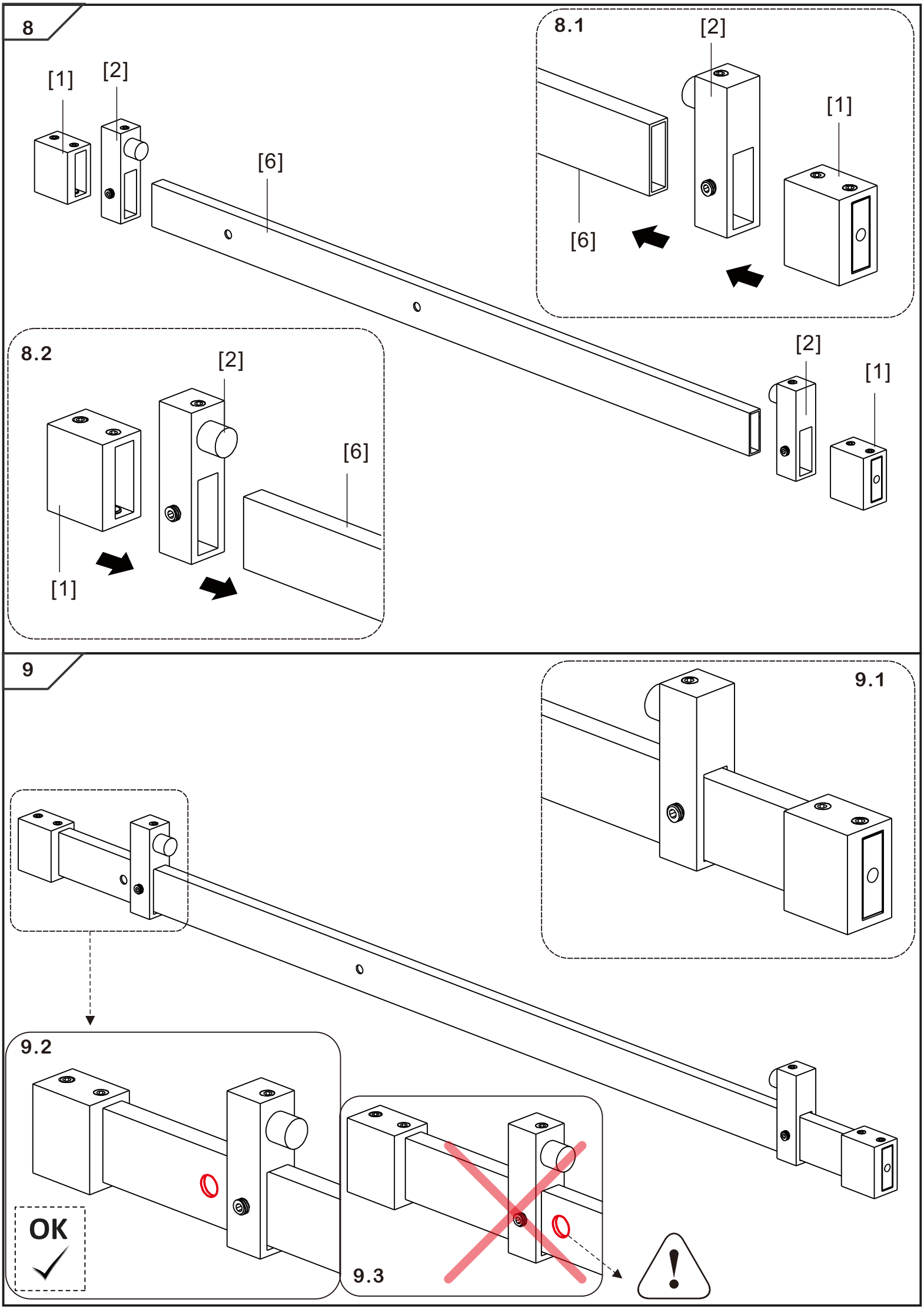
8
[1]
[2]
[6]
8.1
[2]
[1]
[6]
8.2
[2]
[6]
[1]
[2]
[1]
9
9.1
9.2
OK
9.3

10

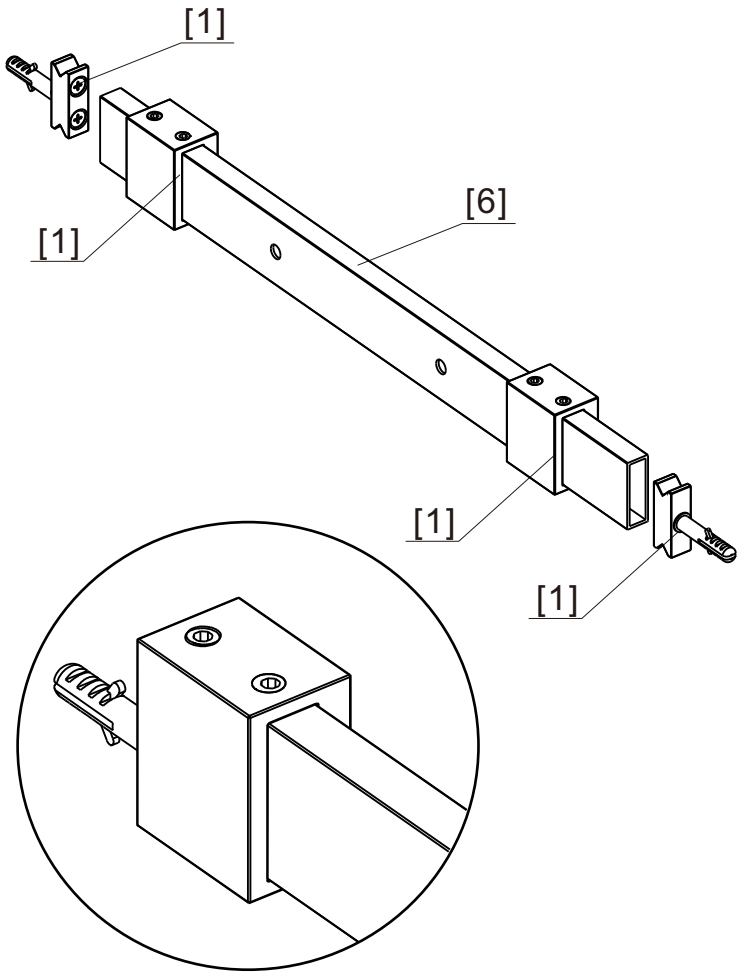

10.1

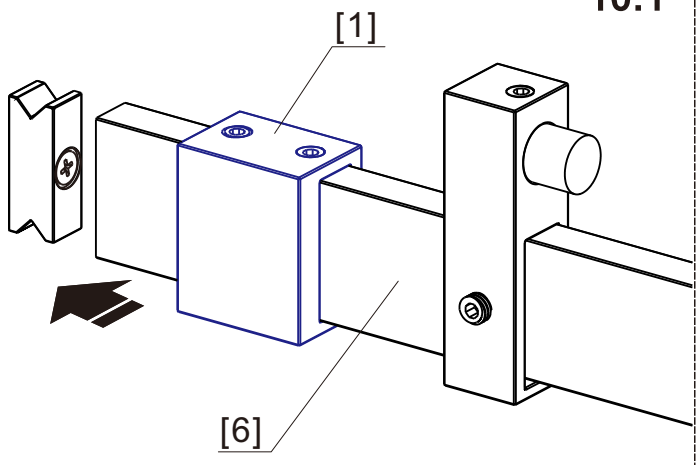

10.2

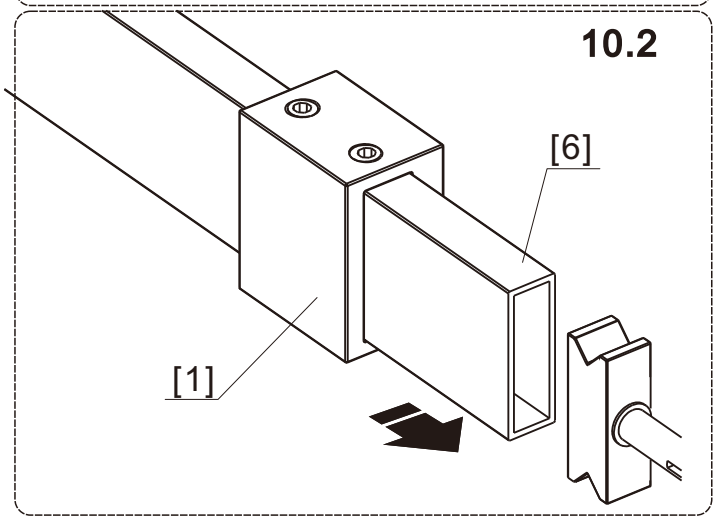

11

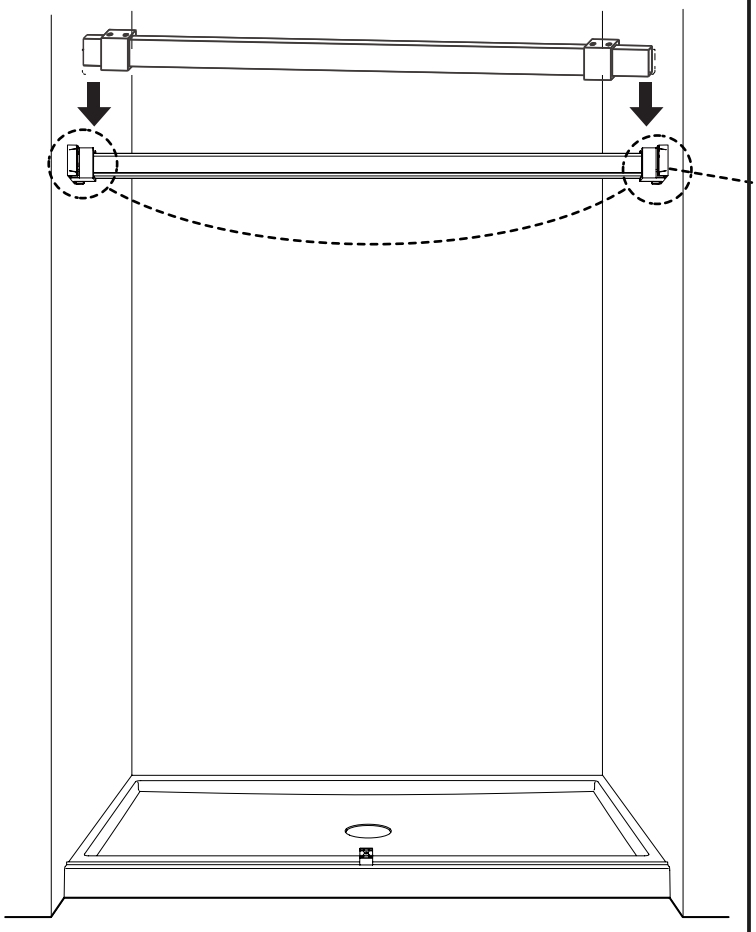

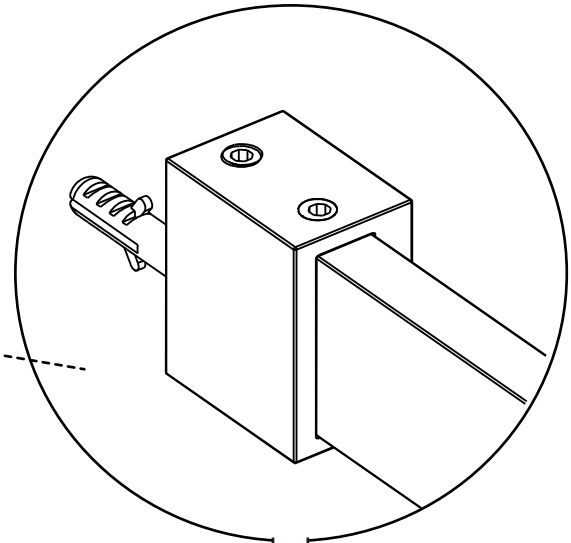

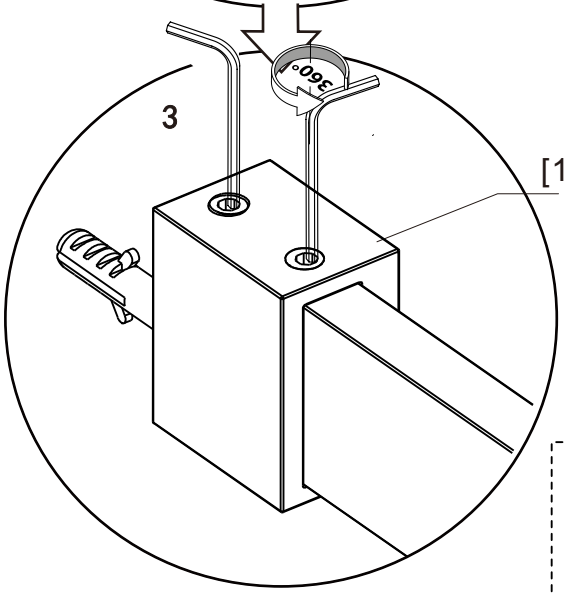

OK

12

Installing Sliding Glass Panels

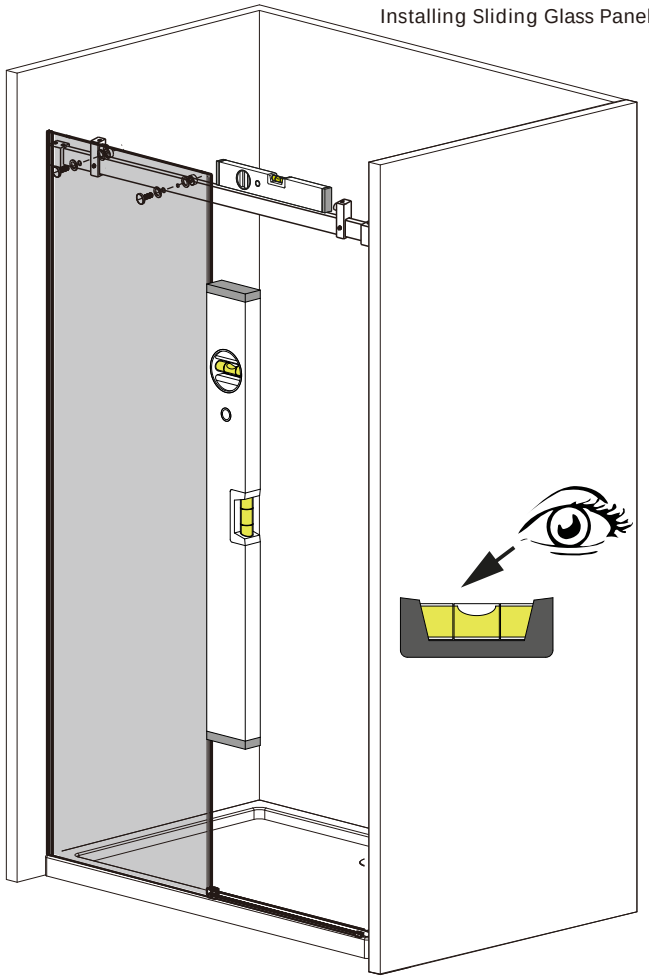

12.1

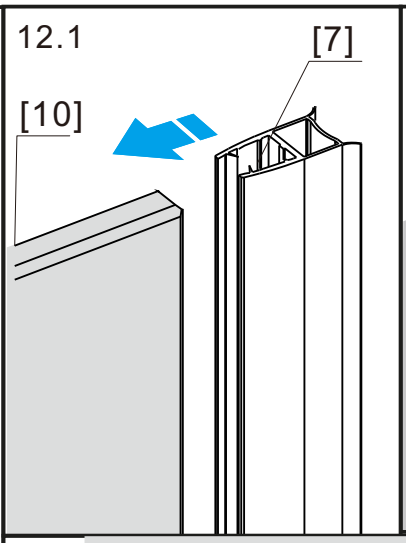

12.2

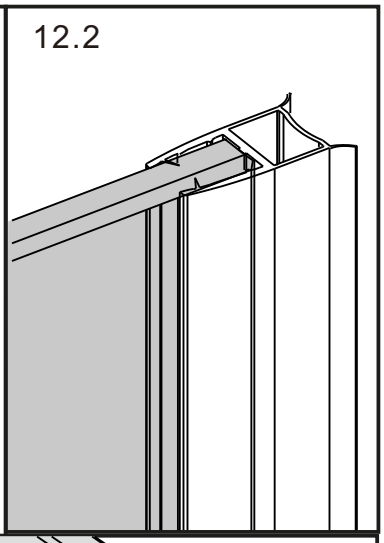

12.3

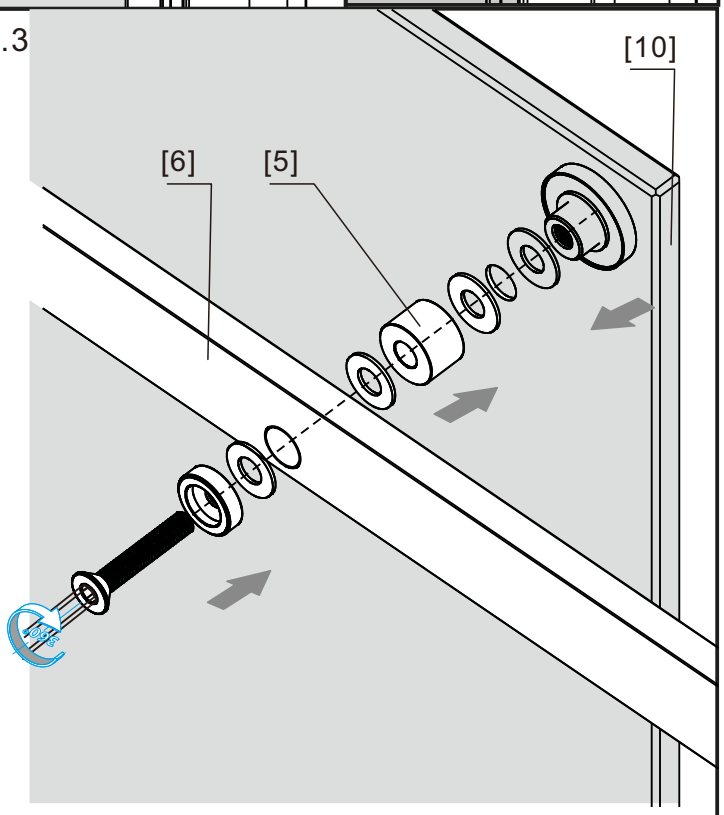

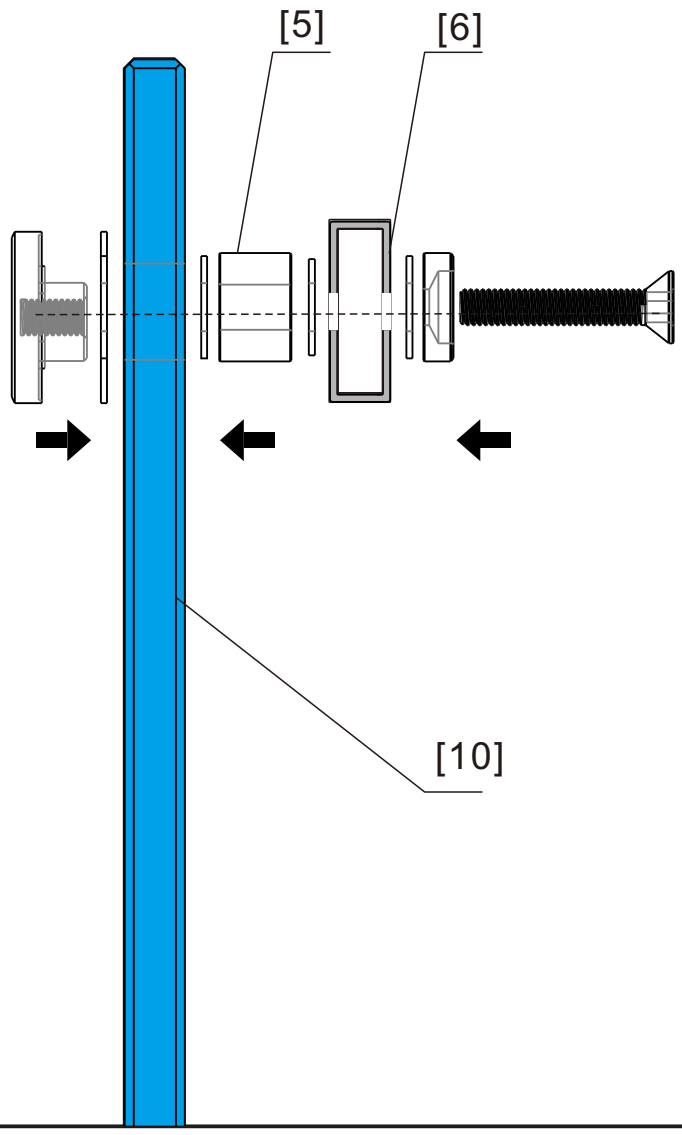

12.4

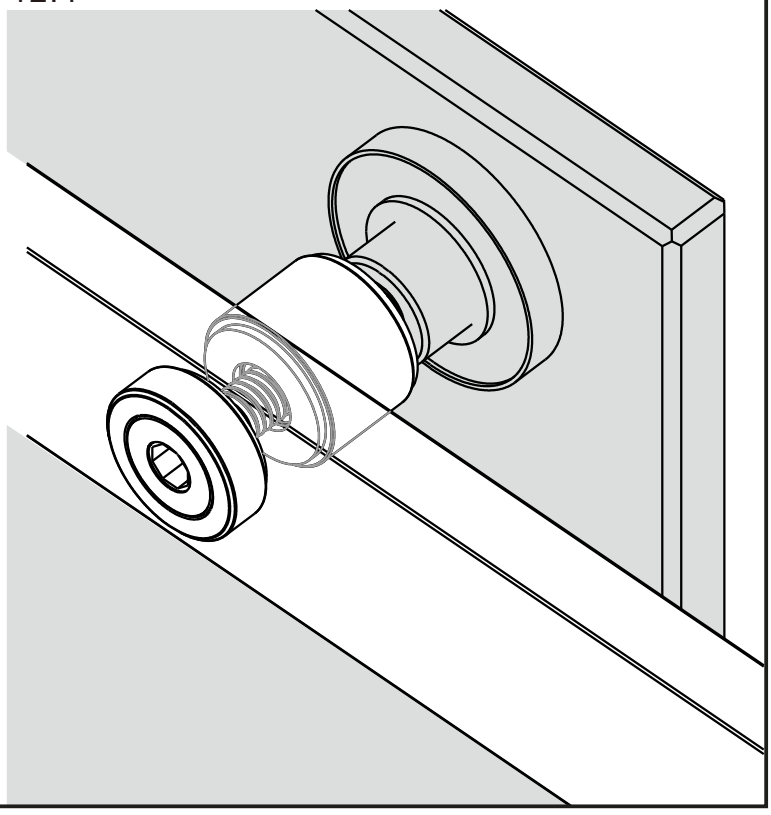

13

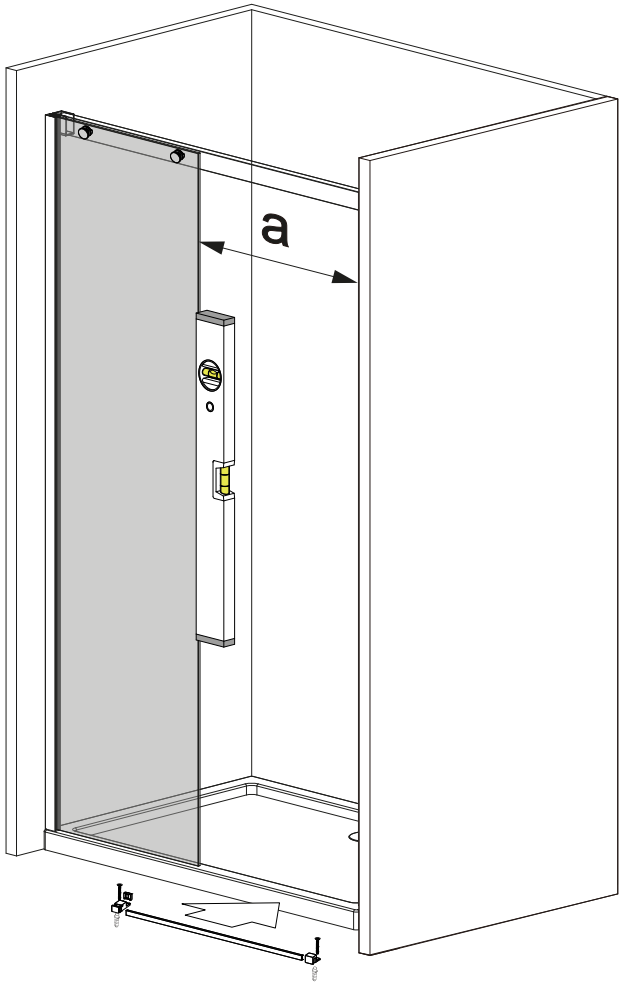

13.1

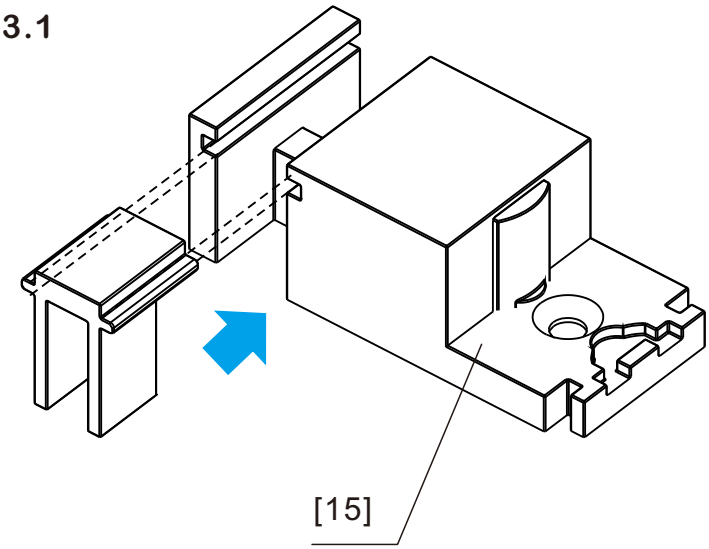

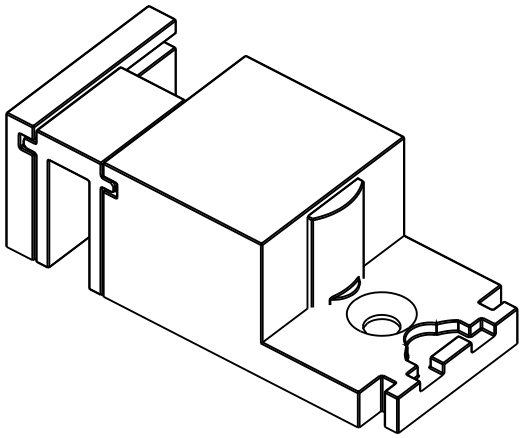

13.2

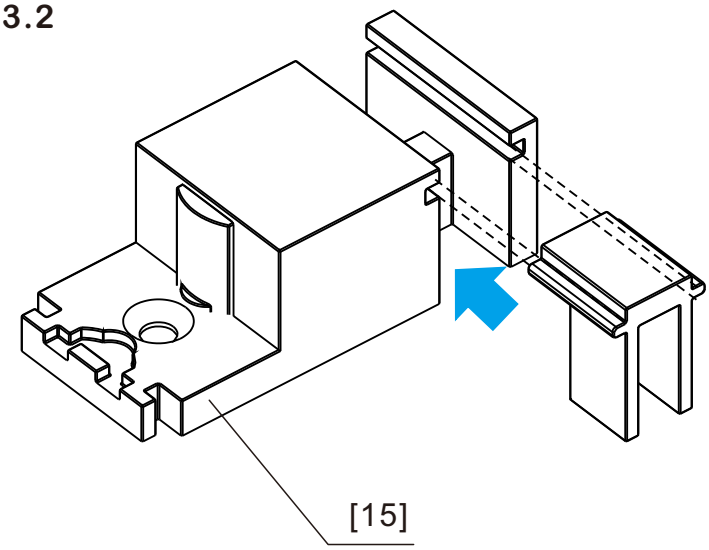

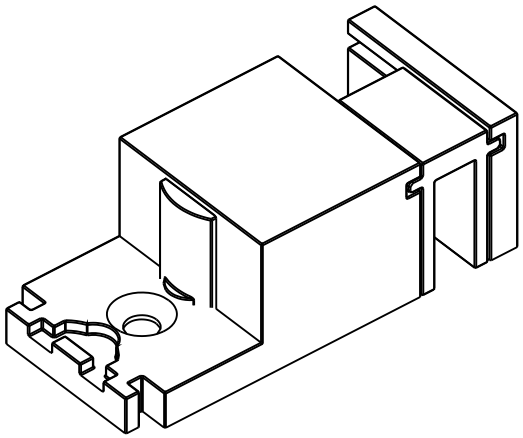

13.3

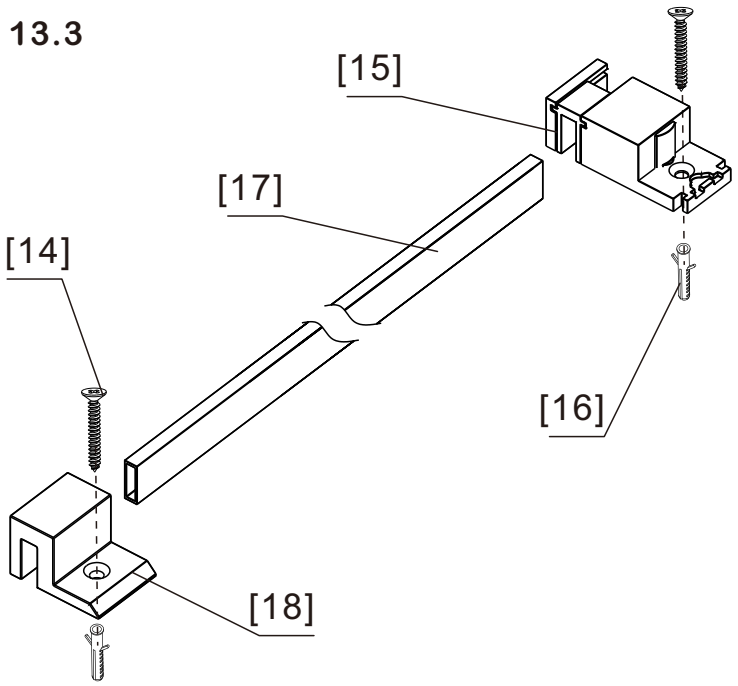

13.4

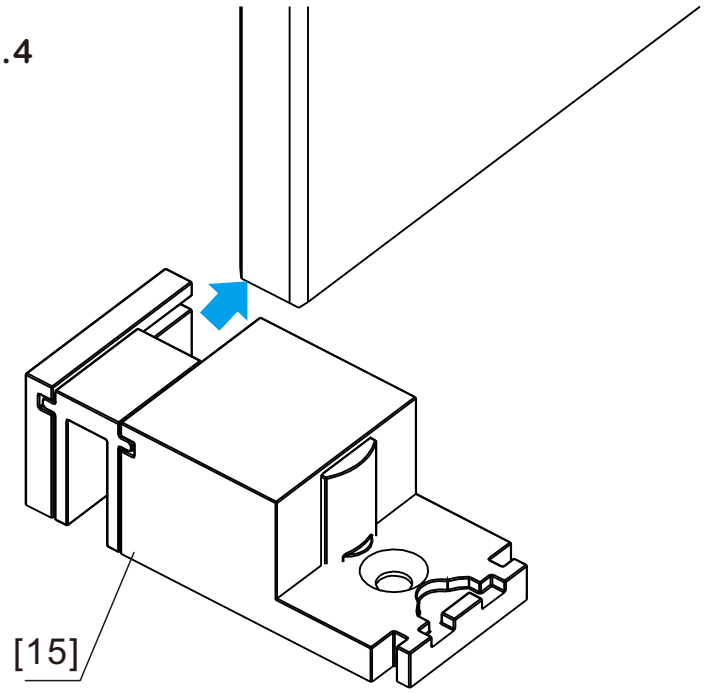

13.5

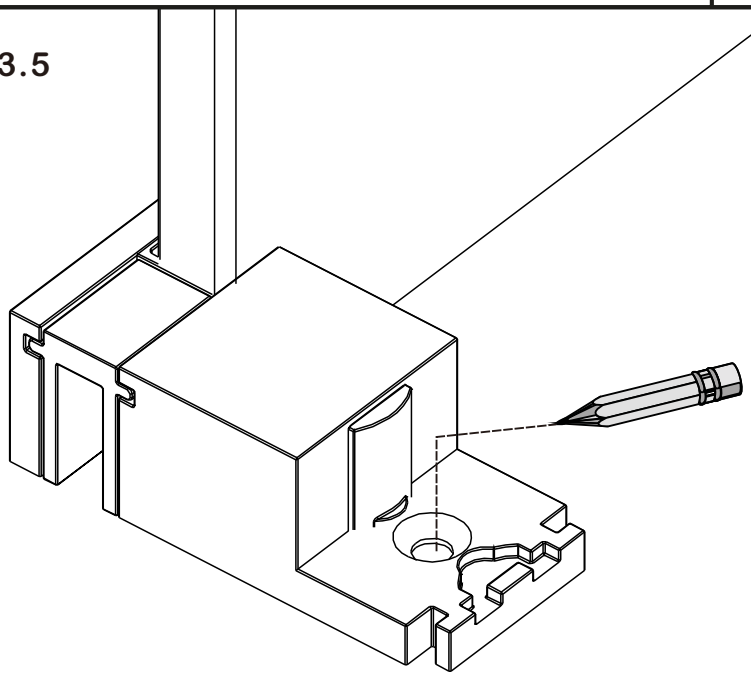

13.6

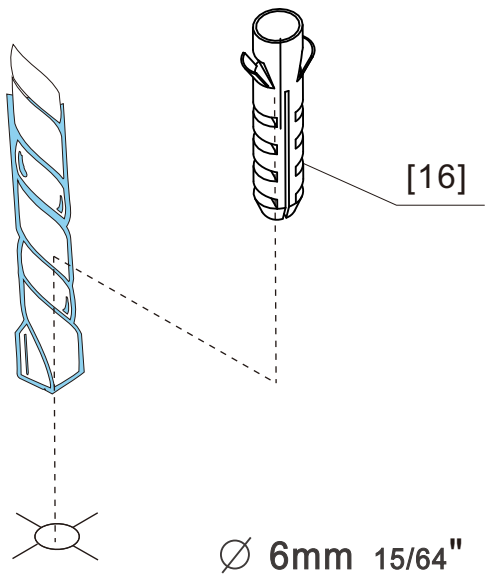

13.7

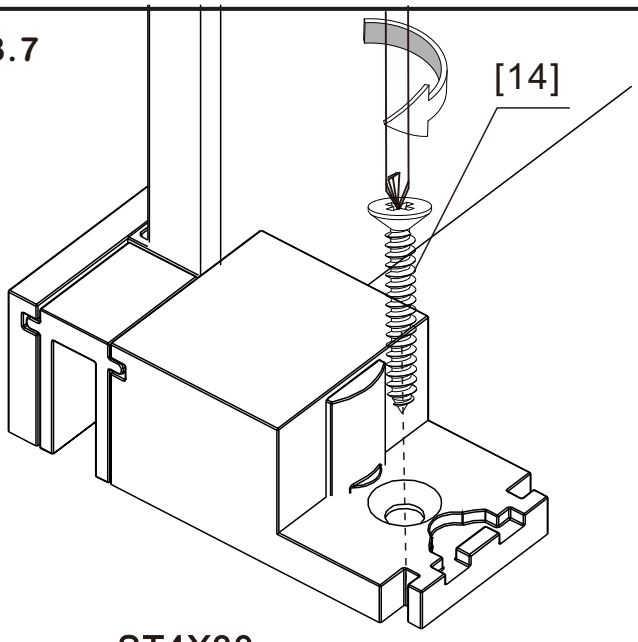

ST4X30

13.8

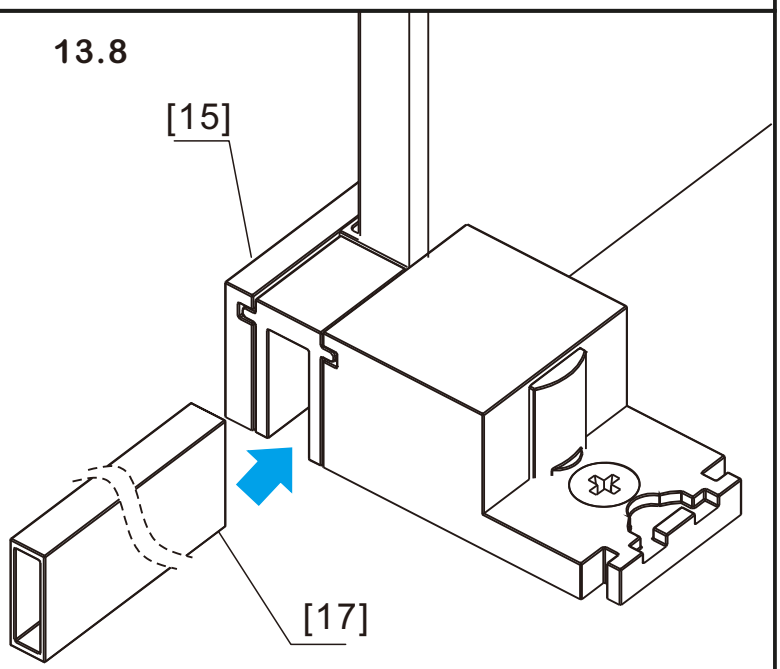

13.9

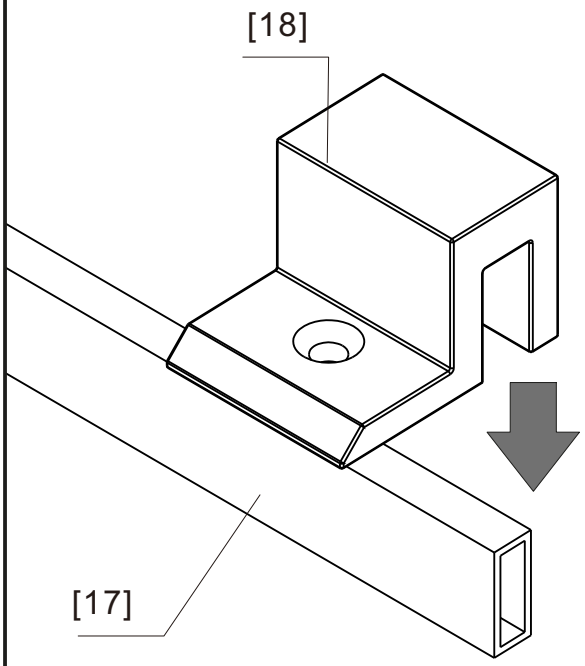

13.10

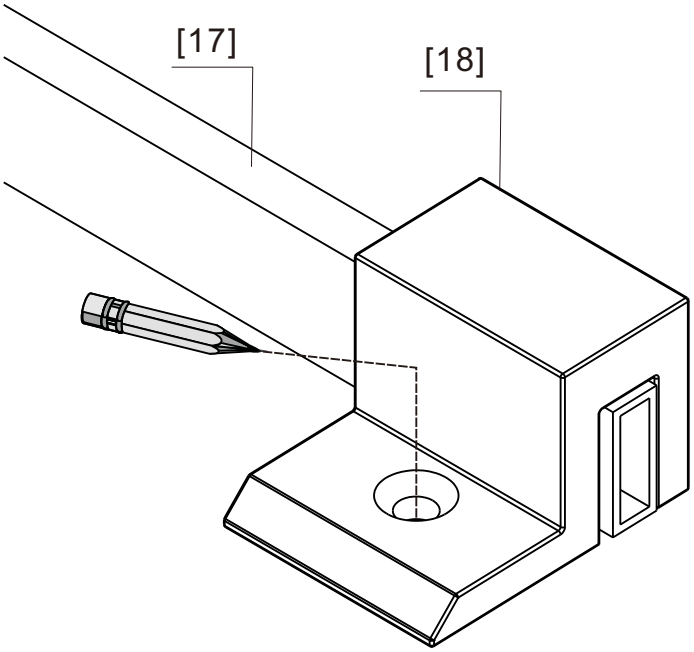

13.11

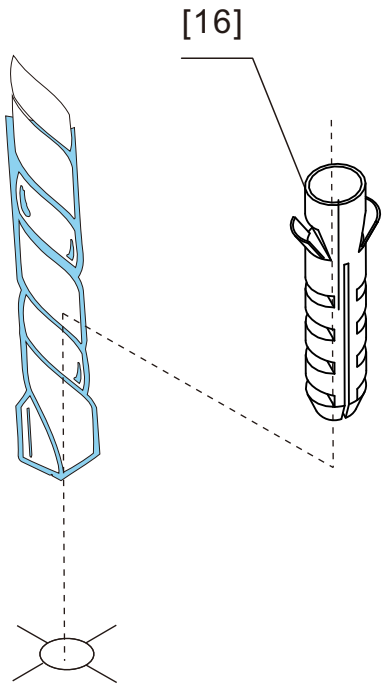

∅ 6mm 15/64"

13.12

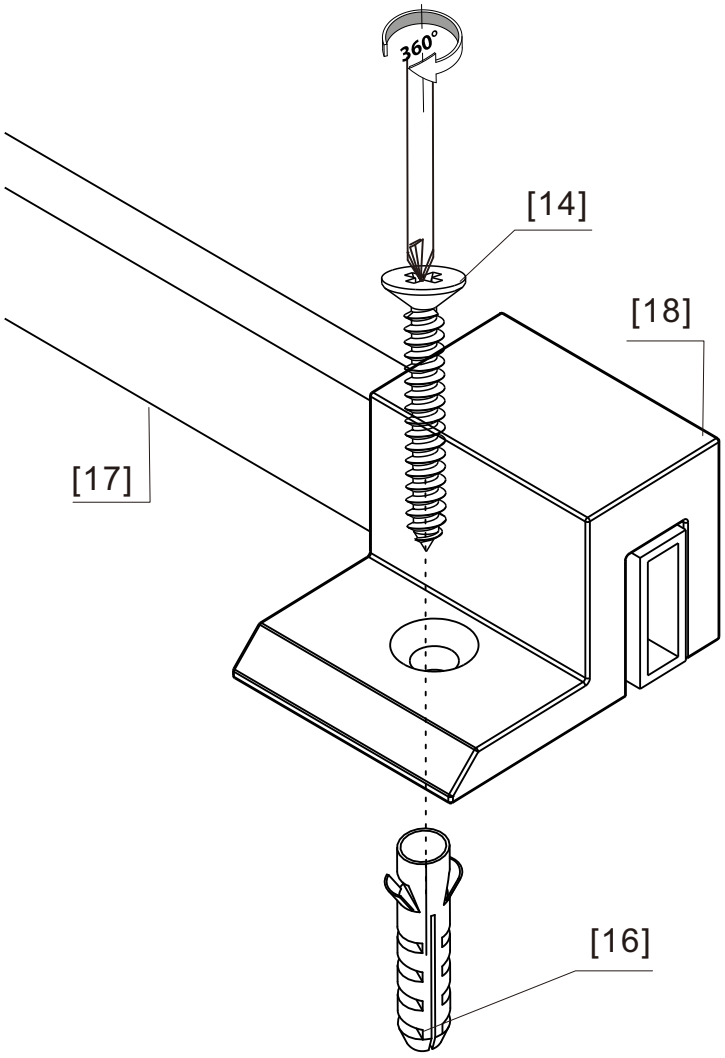

ST4X30

14

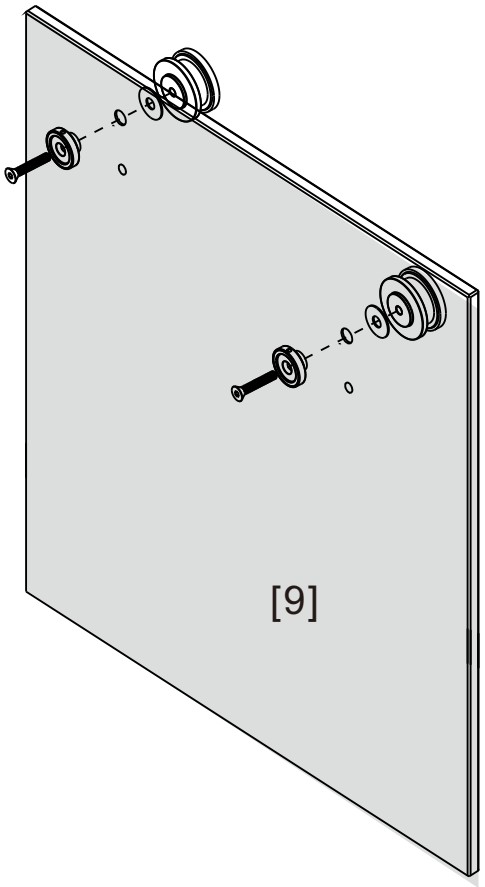

14.2

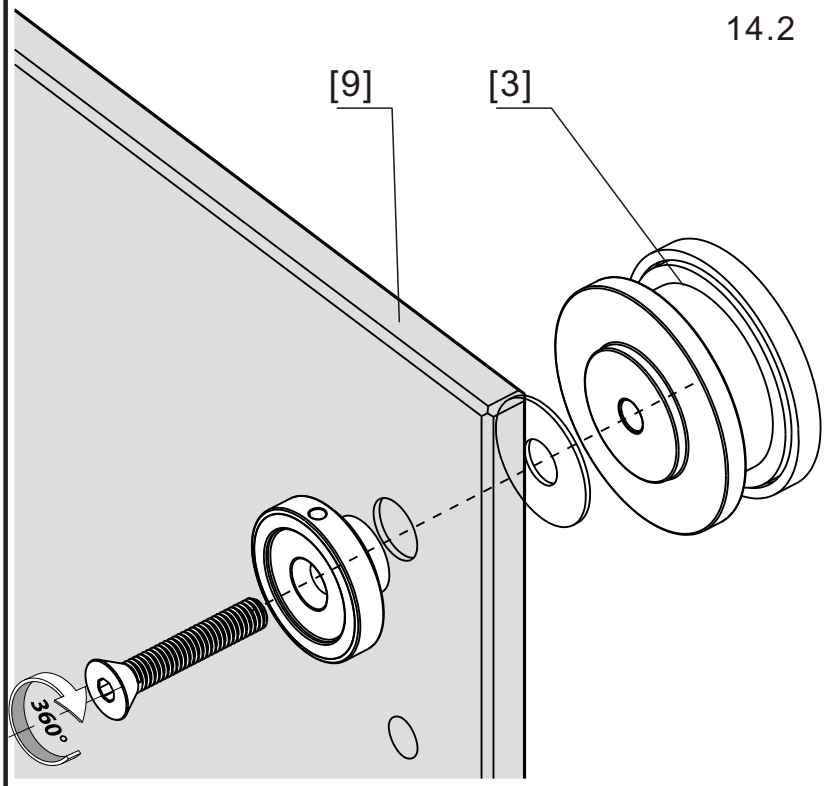

14.1

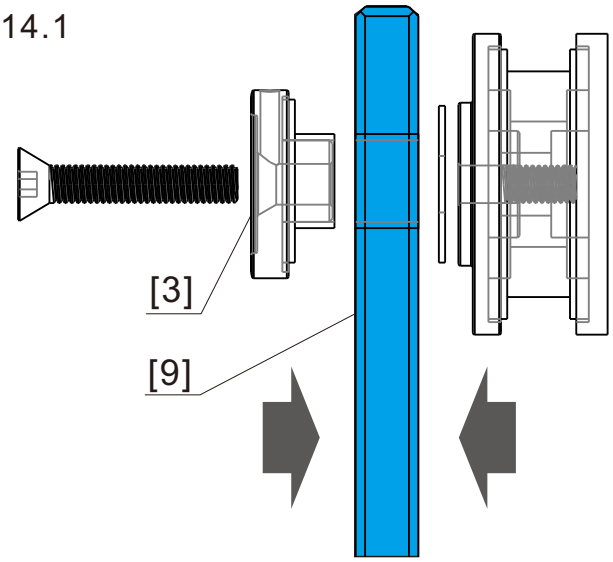

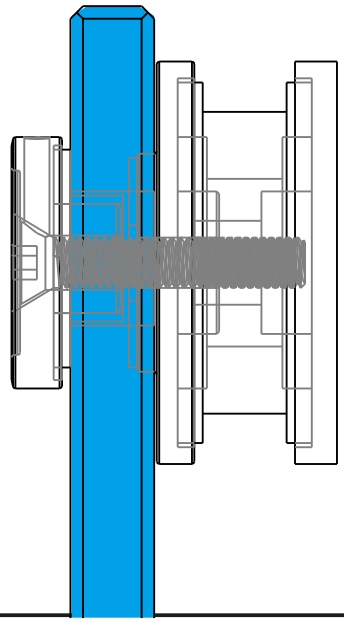

14.3

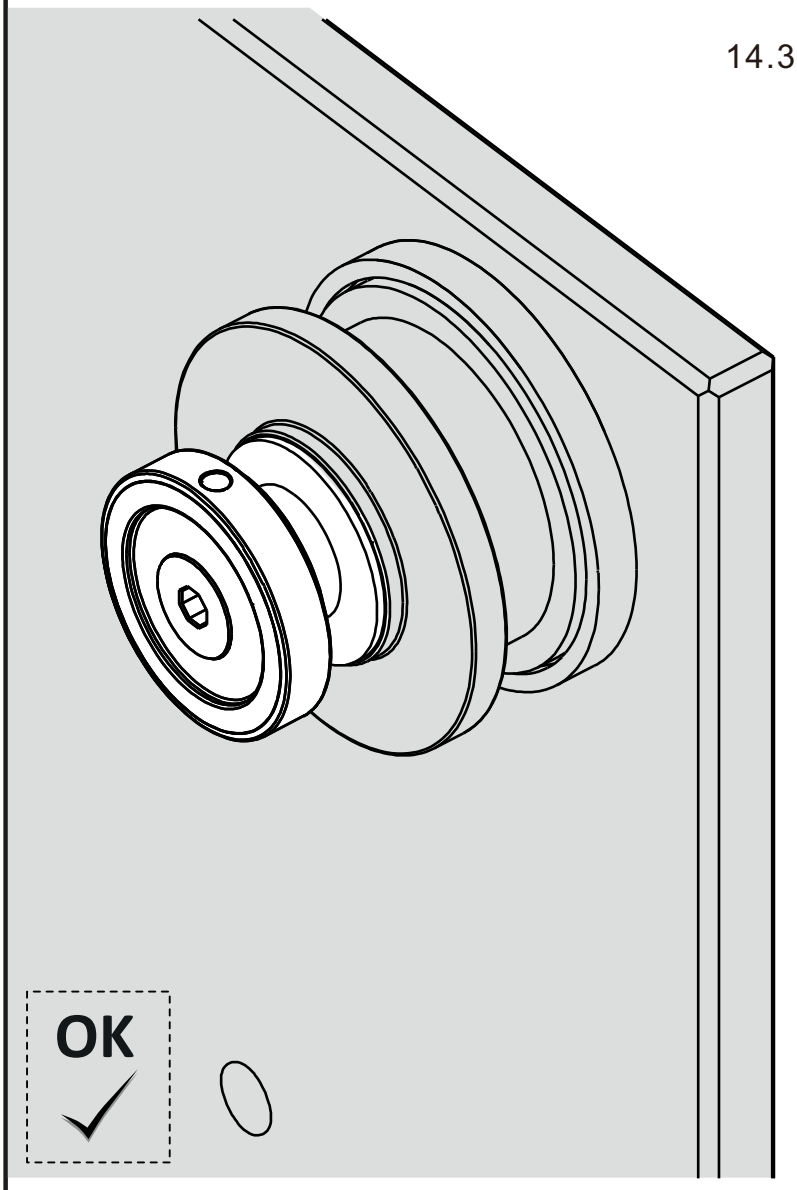

15

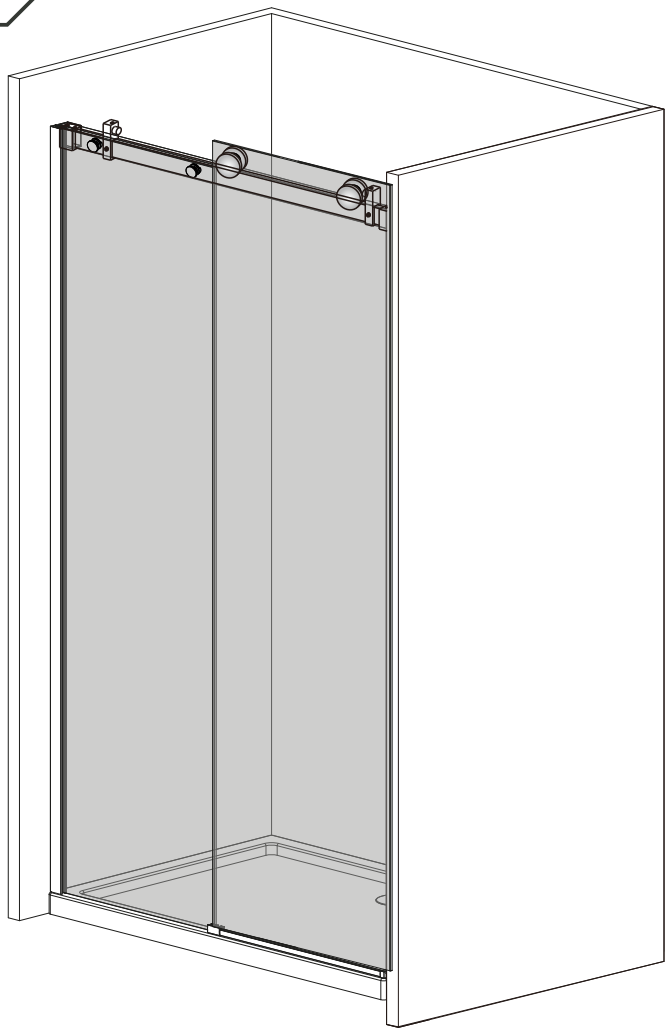

15.1

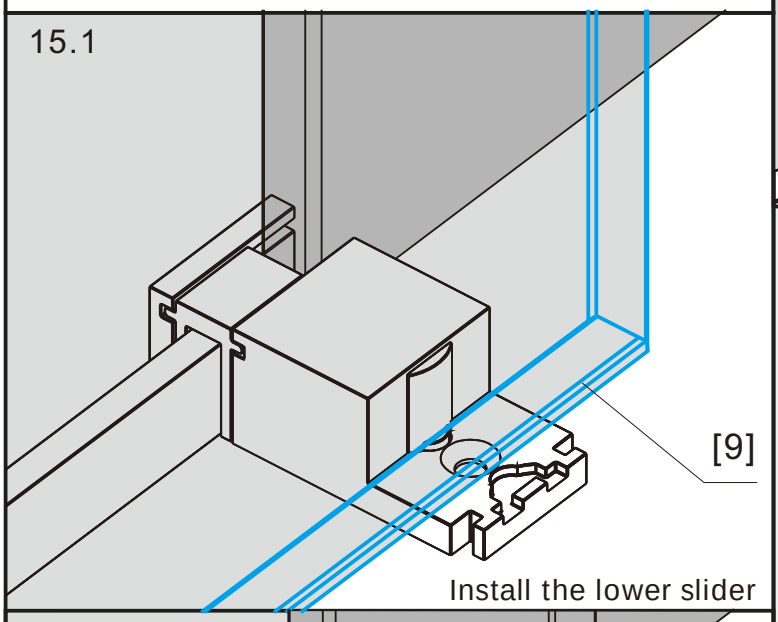

Install the lower slider

15.2

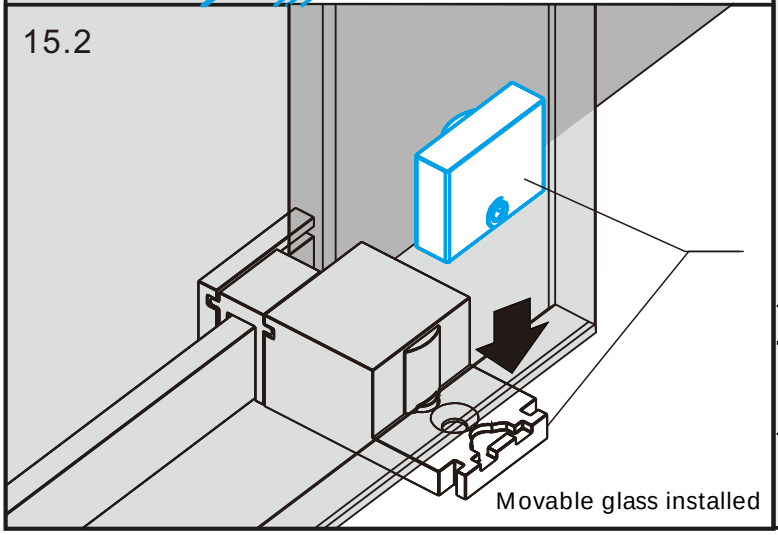

Movable glass installed

15.3

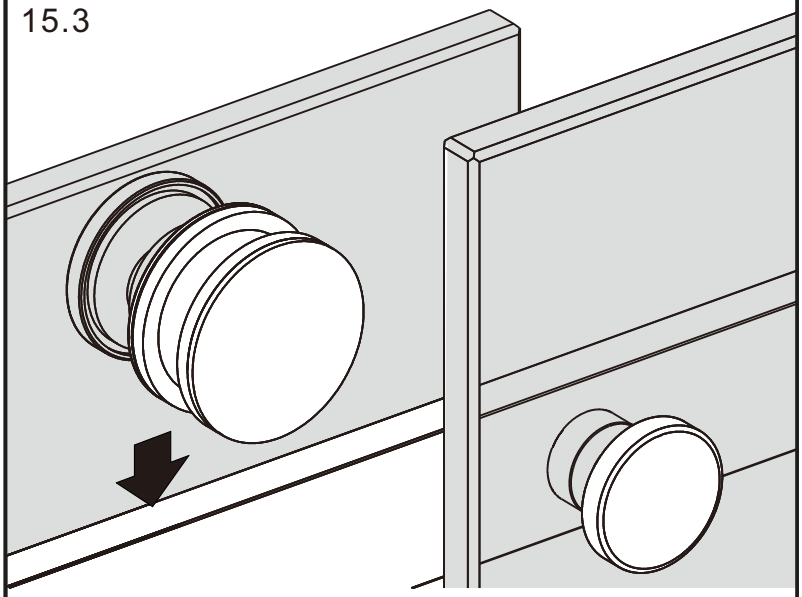

15.4

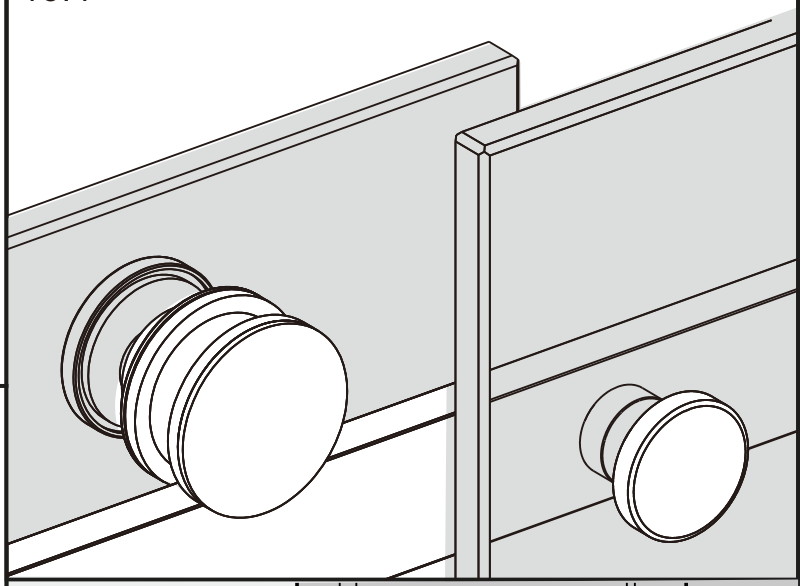

15.5

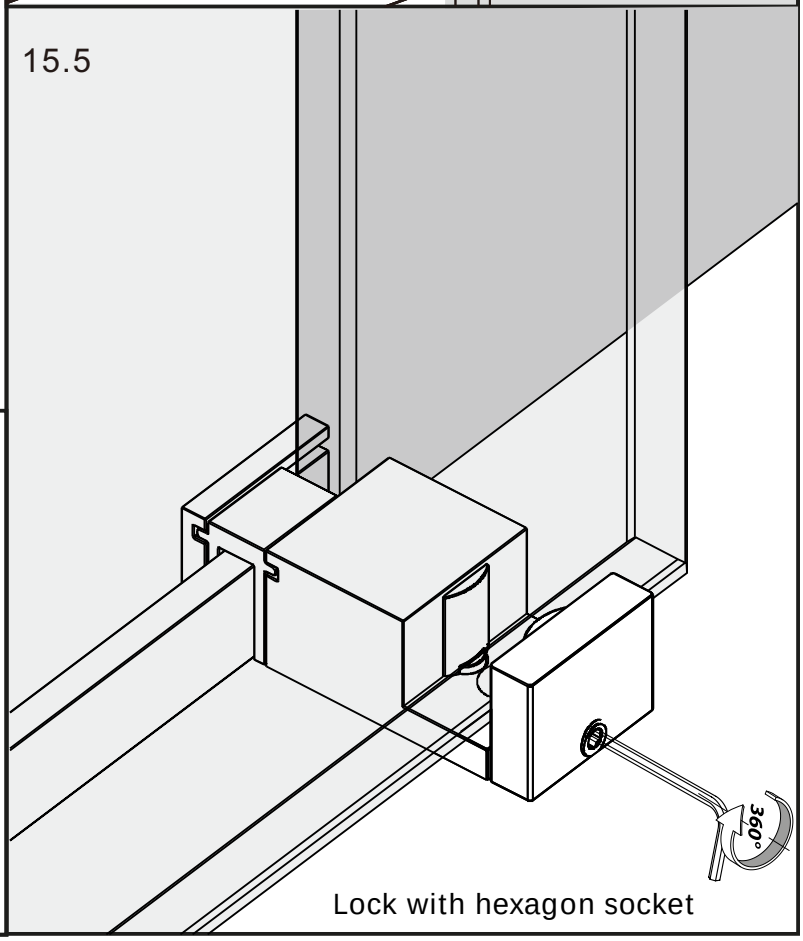

Lock with hexagon socket

16

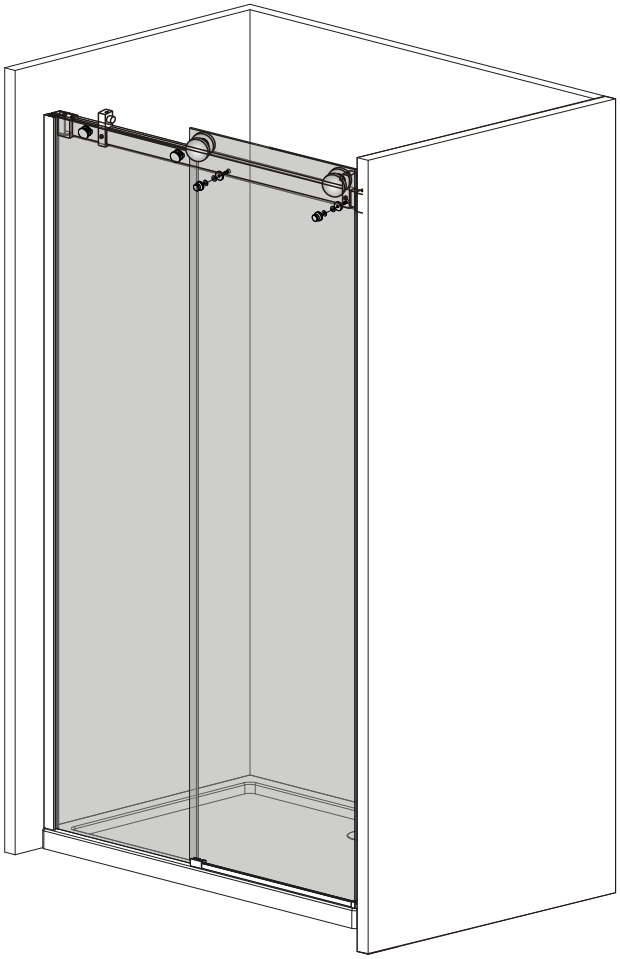

16.1

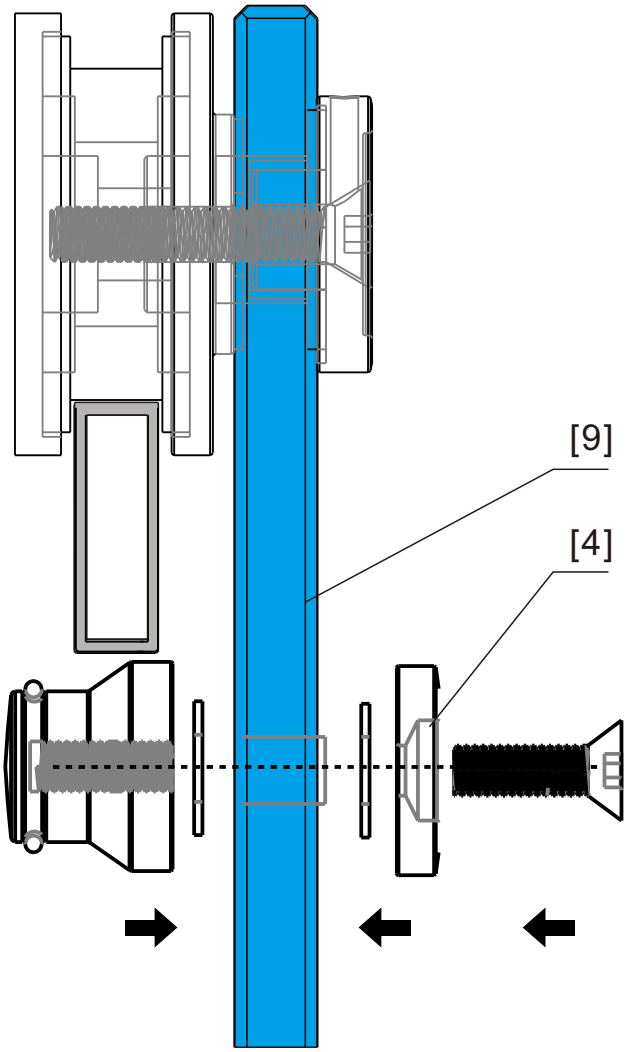

16.2

The anti-jump piece is installed on the movable door [9].

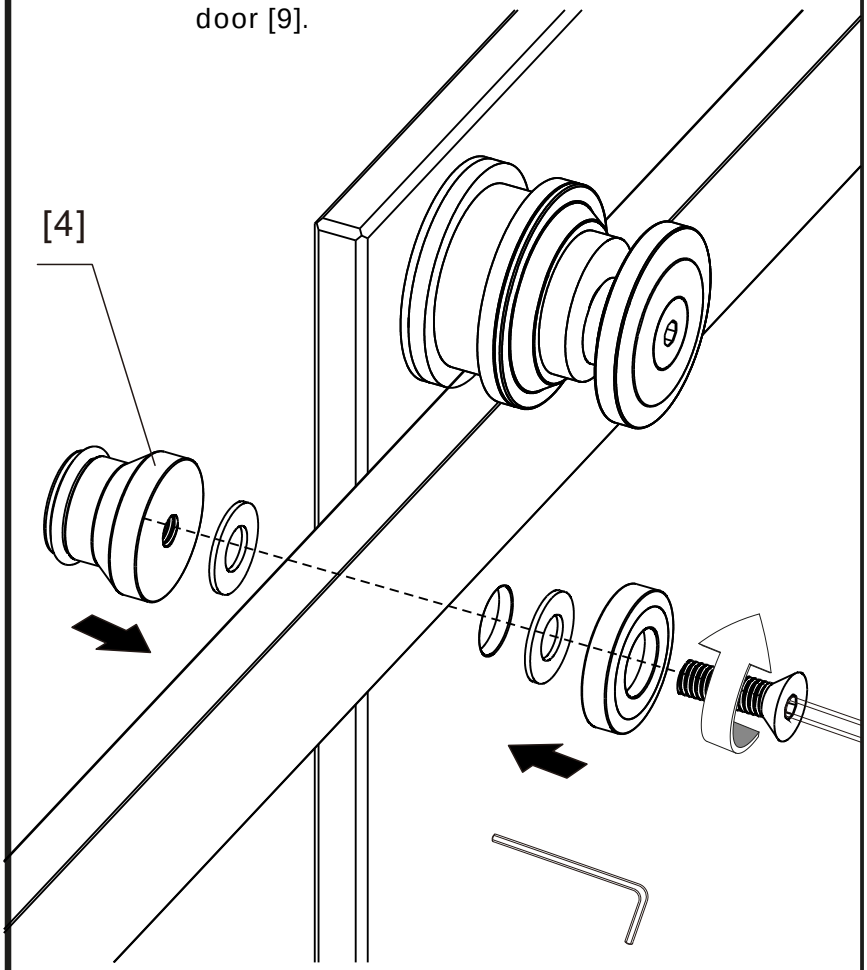

16.3

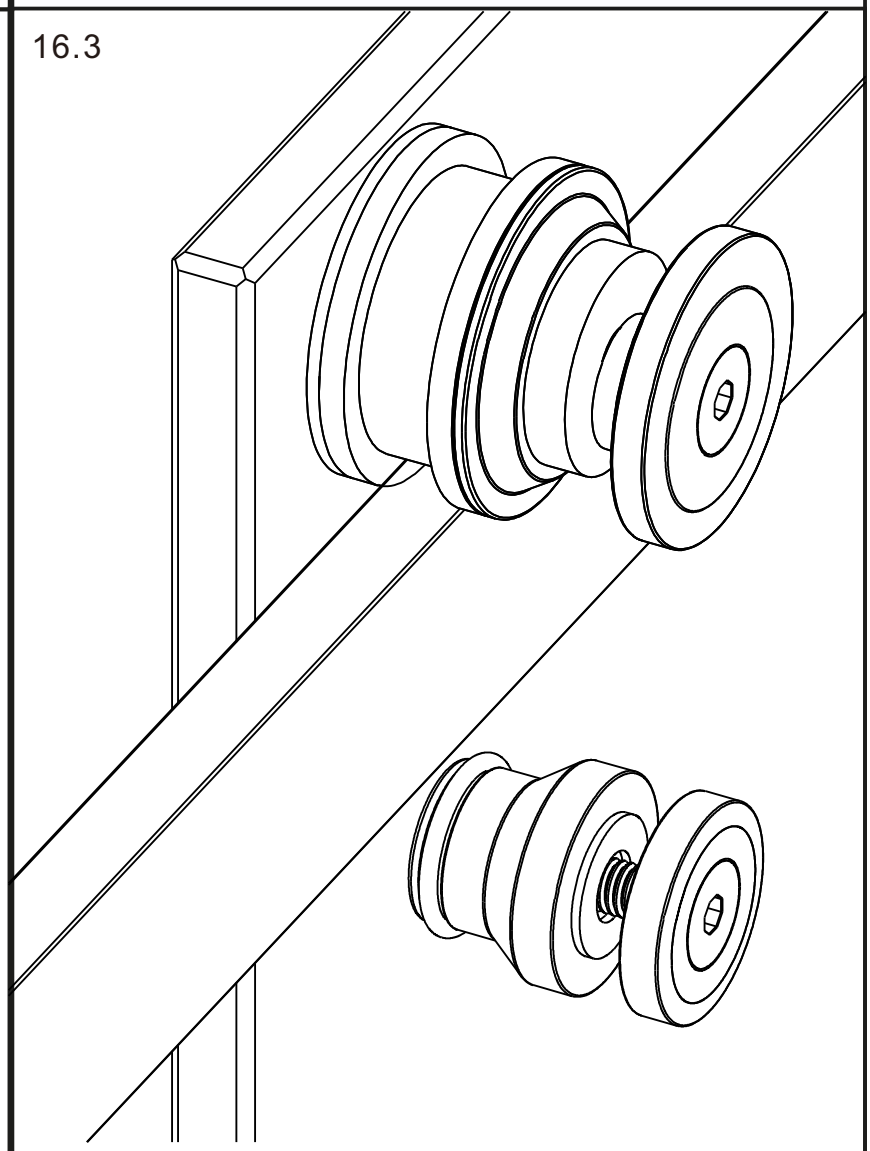

17

Install water barrier

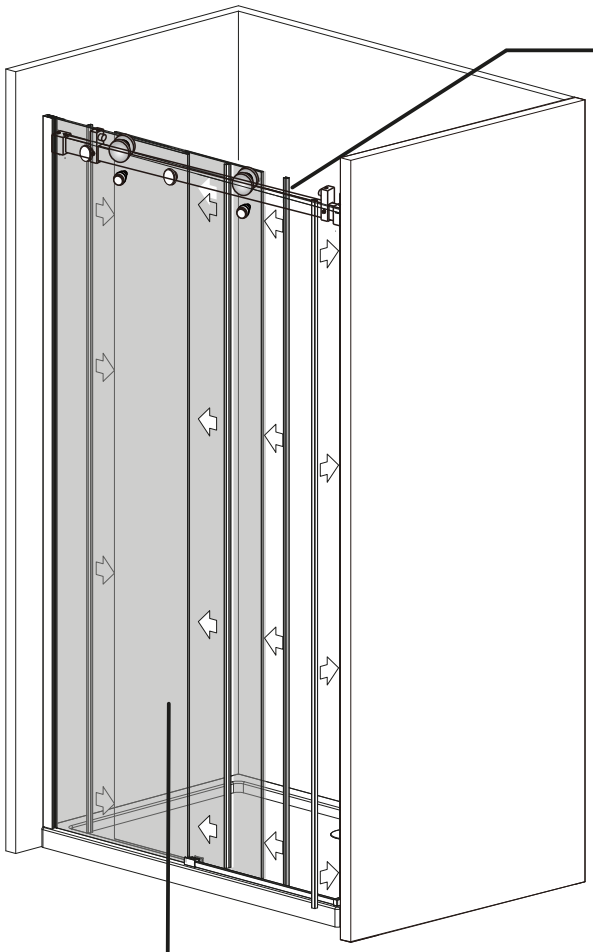

17.1

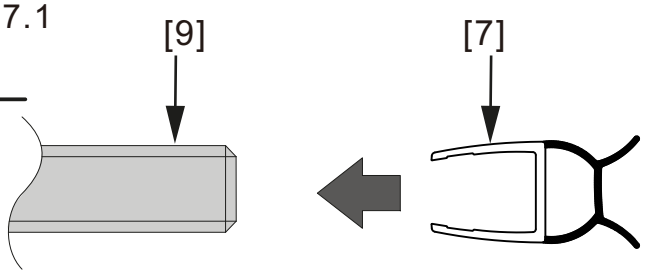

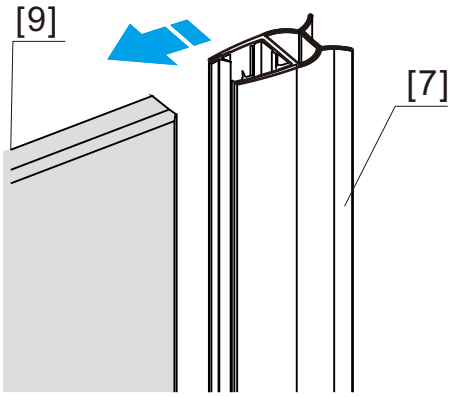

Install waterproof strips[7]

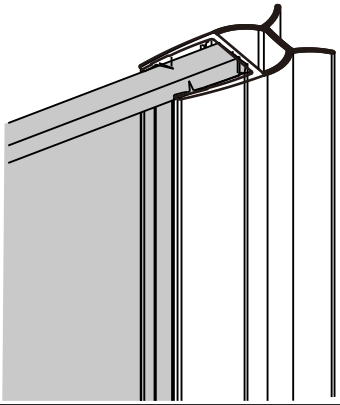

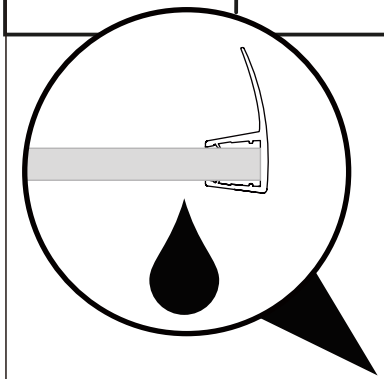

17.2

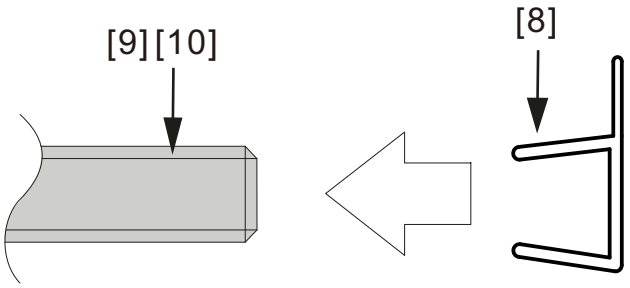

Install F-shaped water barriers on fixed and movable glass[8].

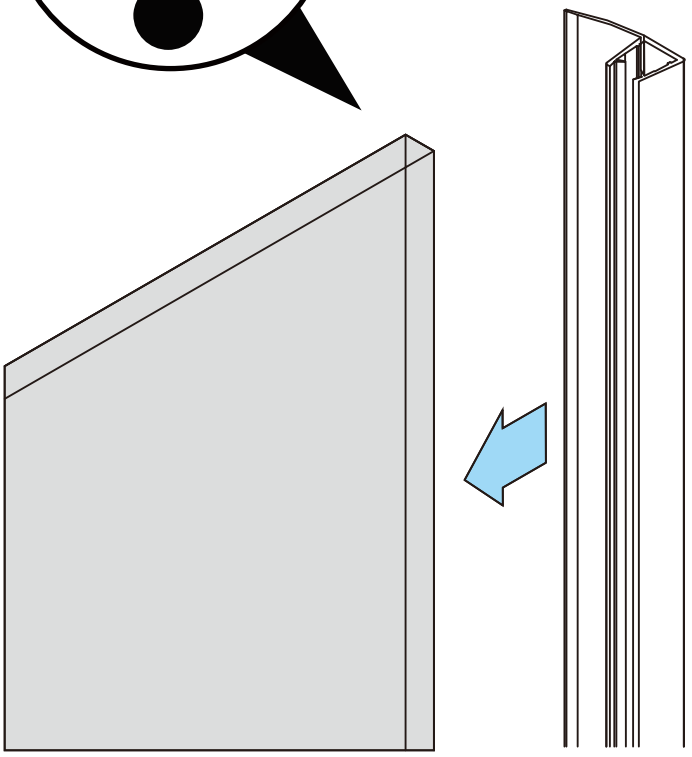

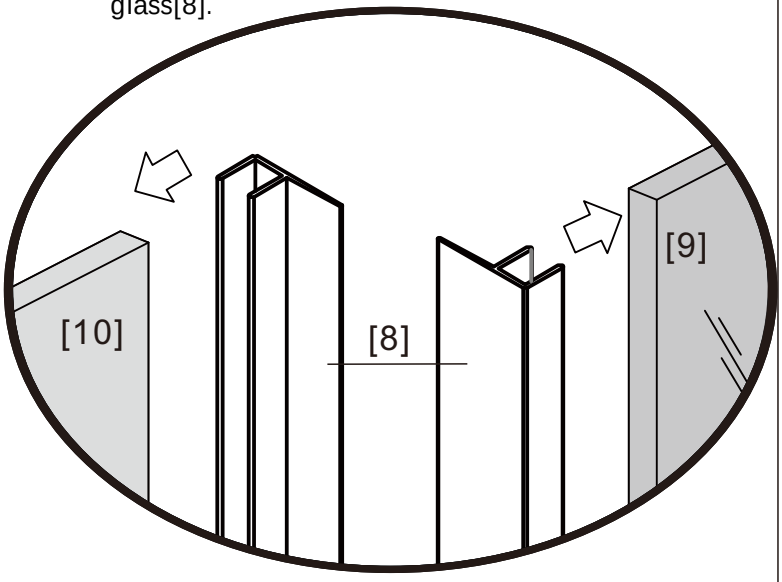

18

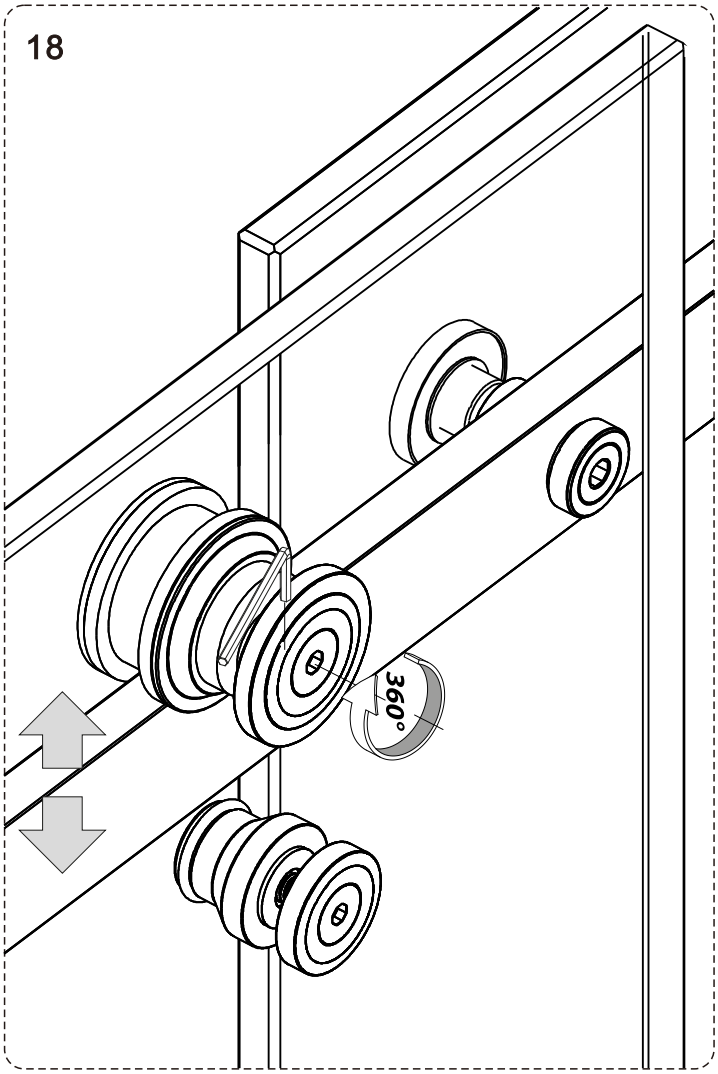

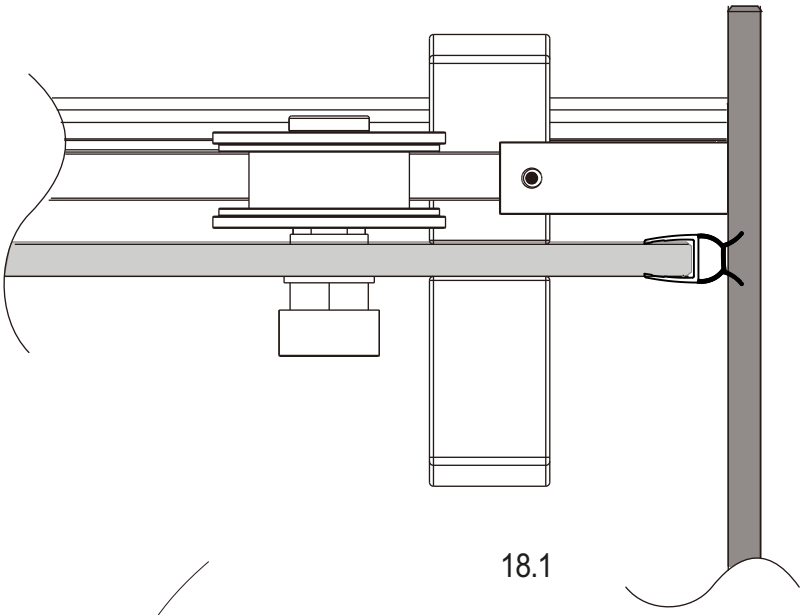

18.1



Up and down level height adjustment

18.2

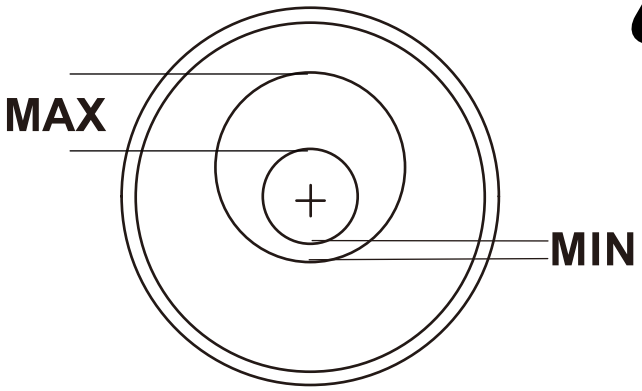

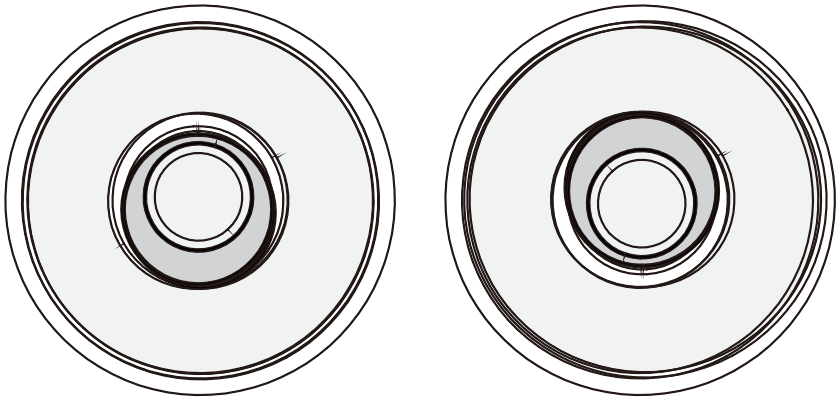

18.3

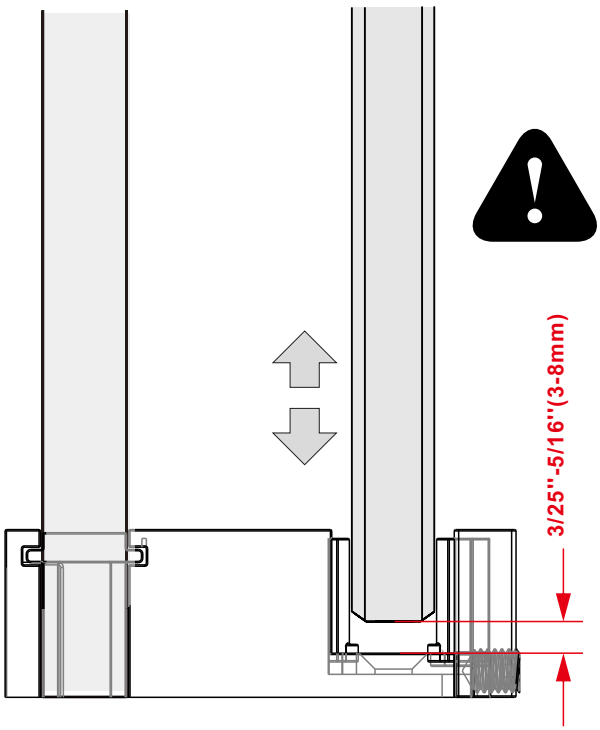

19

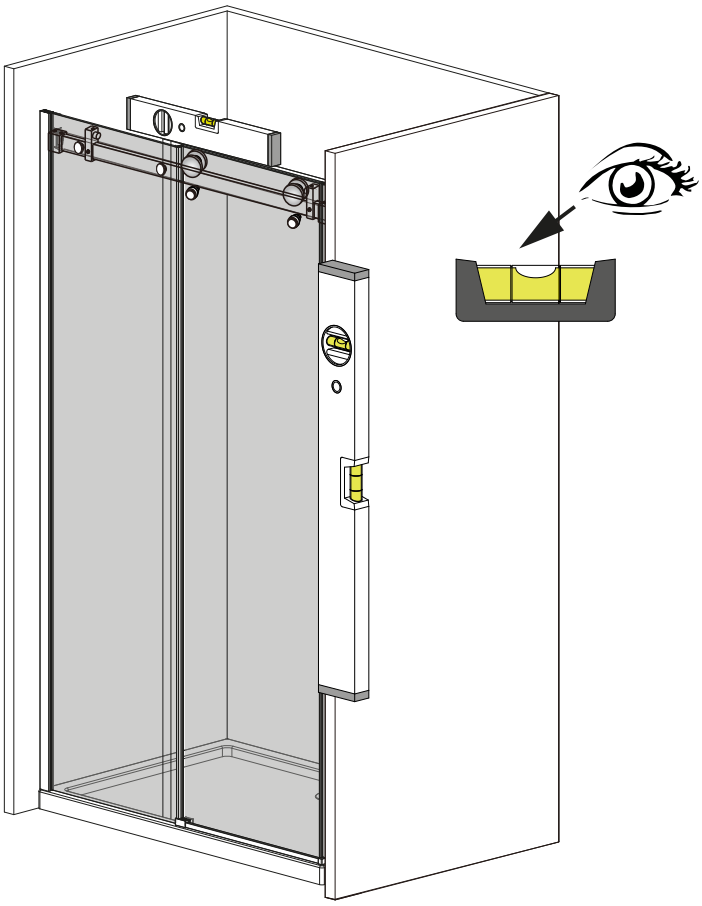

19.1

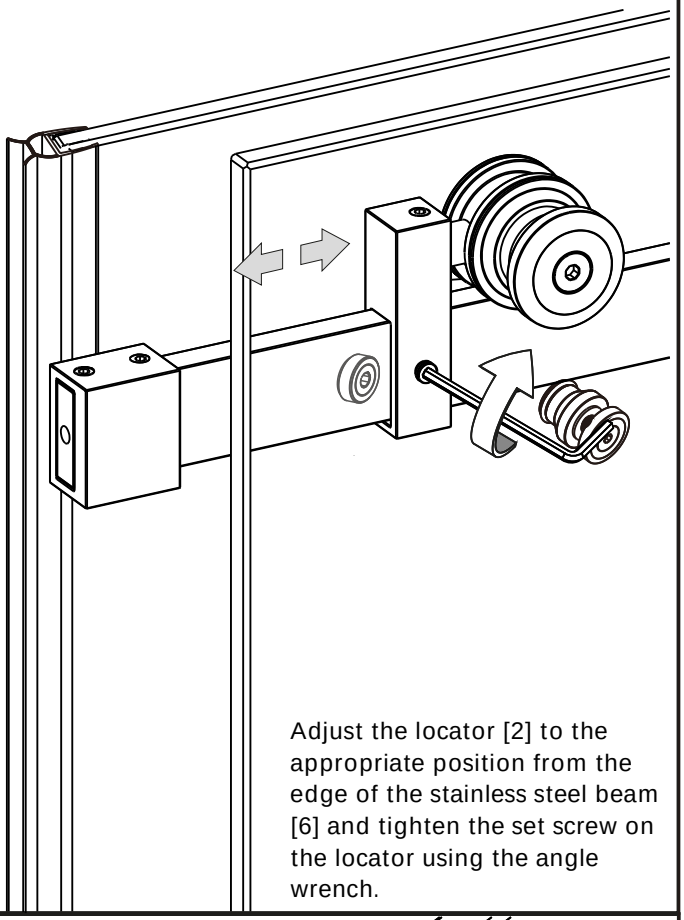

Adjust the locator [2] to the appropriate position from the edge of the stainless steel beam [6] and tighten the set screw on the locator using the angle wrench.

19.2

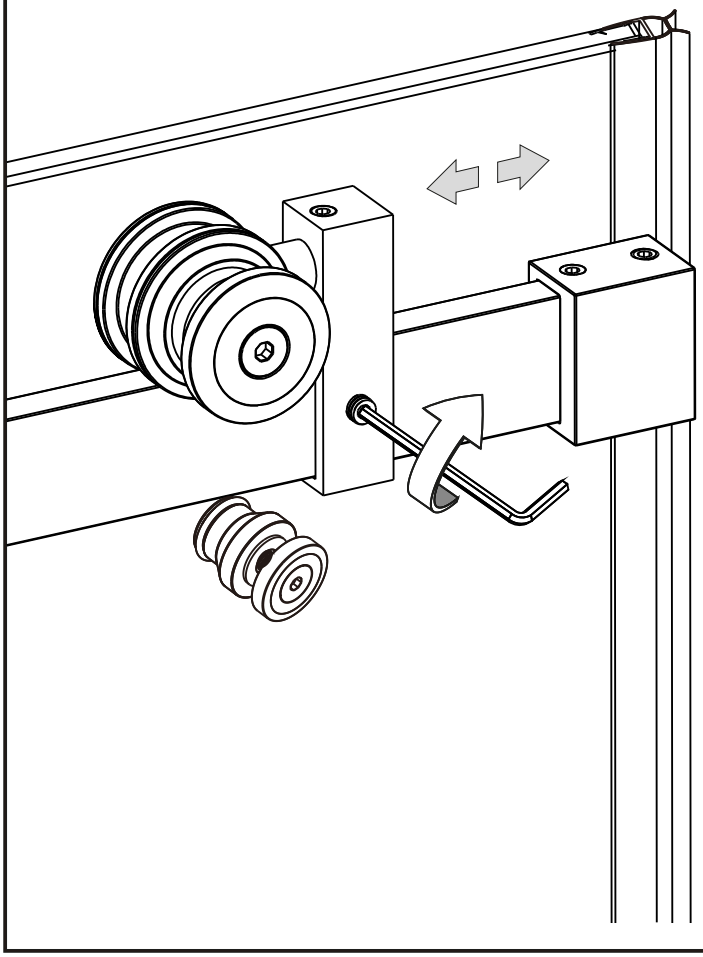

19.3

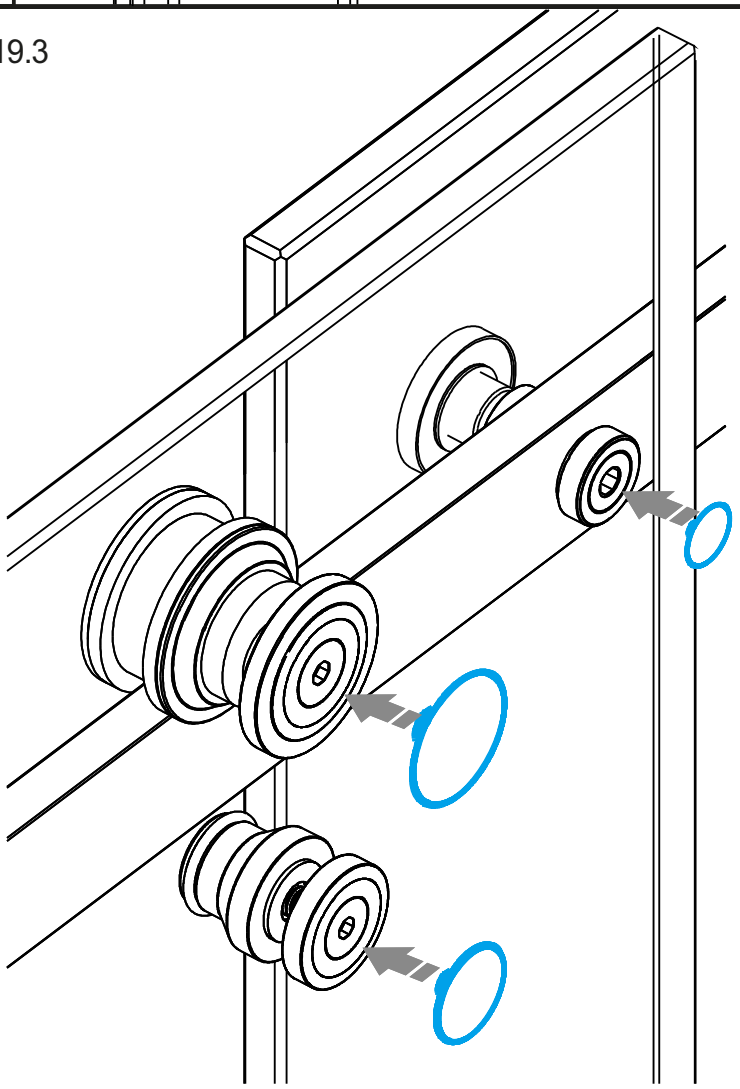

20

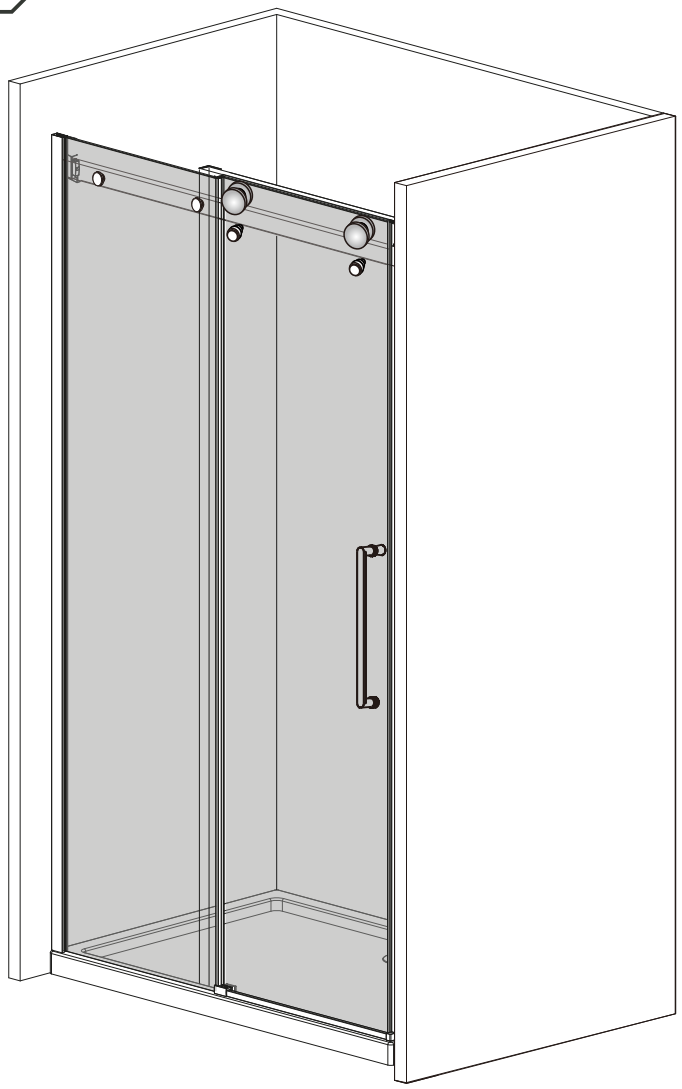

20.1

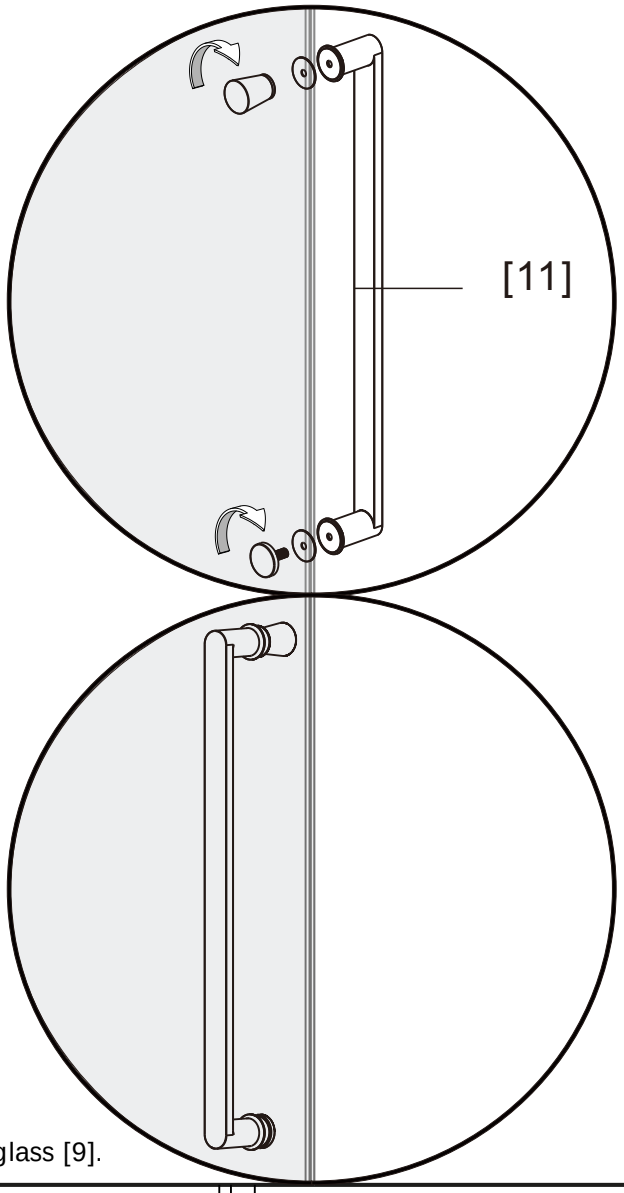

Install the handle [11] onto the sliding glass [9].

21

Allow the glass glue to cure for
24 hours before using the shower.





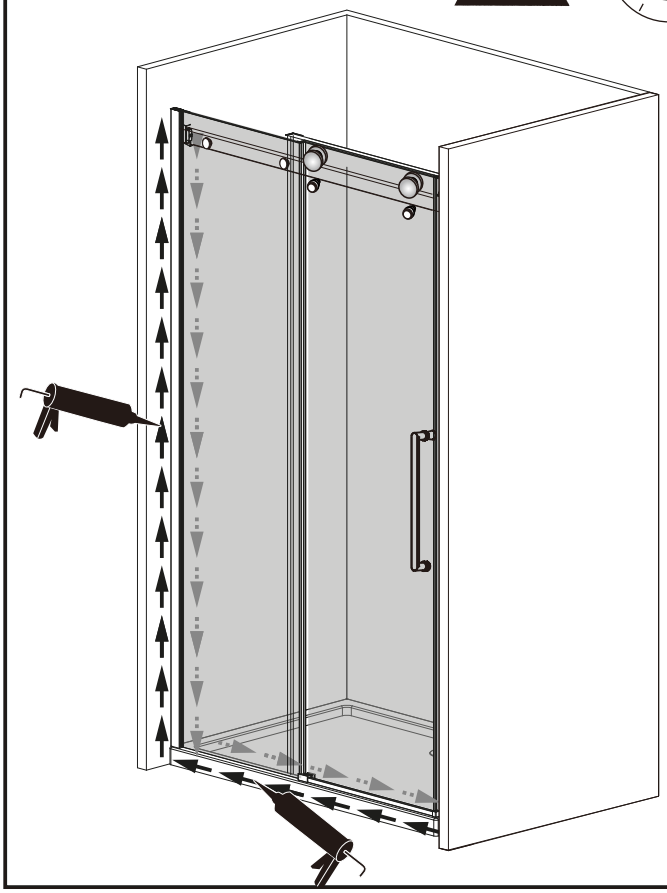

21.1

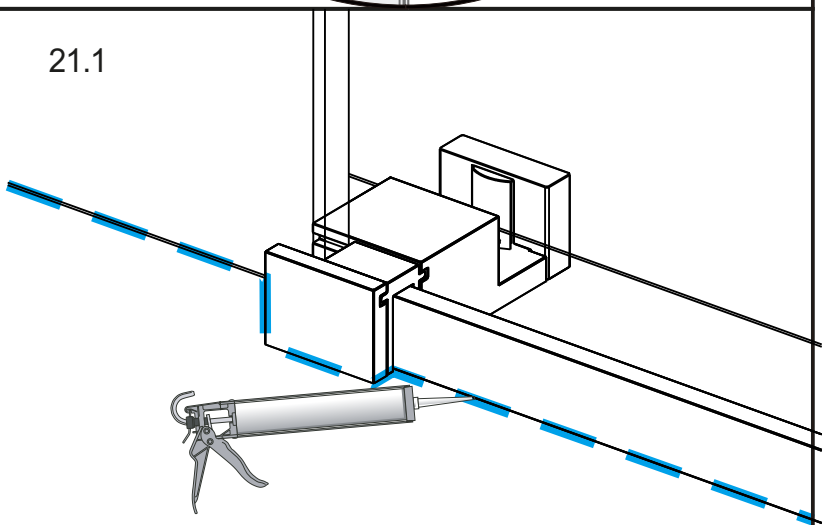

21.2

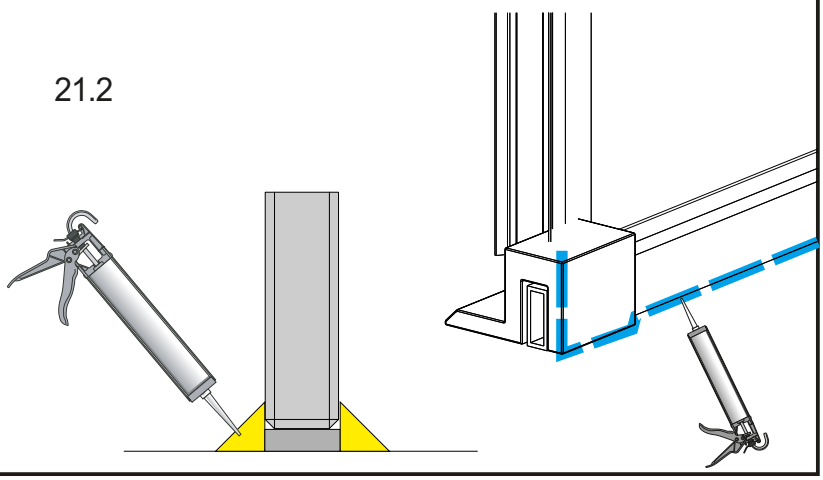

THANK YOU

We hope you enjoy
your purchase.

All of our products are crafted with an
obsessive attention to detail.

Any problem with installation,
please watch the video.

Scan Me