# ASSEMBLY INSTRUCTIONS

## US-CBN215A

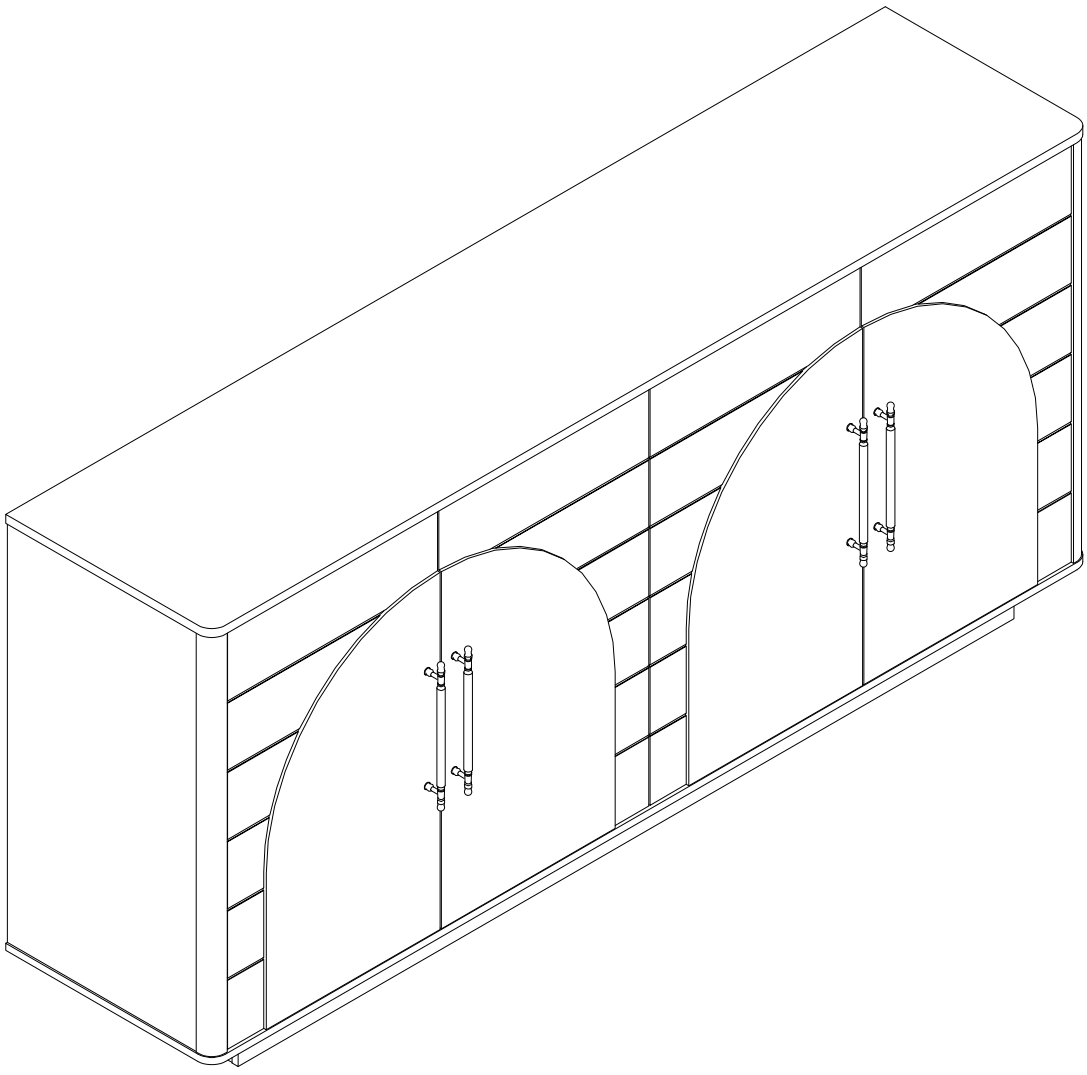

EN

## General Guidelines

- Please read these instructions carefully and use the product as directed.
- Keep this manual for future reference. If the product is transferred to another owner, please pass this manual along with it.
- These instructions may not cover every variation or situation. Please contact us if you need further information or assistance.

## Notes

- For indoor use only. This product must be assembled and used according to this manual. Personal injury or product damage may occur if the product is used for unintended purposes or altered from its original design. We are not responsible for injury or damage caused by incorrect assembly, misuse, or unauthorized modifications.
- Avoid prolonged exposure to moisture or damp environments to help prevent mildew.
- Keep the product away from open flames, heat sources, and direct sunlight.
- Do not place hot items directly on the product surface.
- If any parts are missing or damaged, stop assembly immediately and contact us.
- Assemble the item on a clean, soft, flat surface. Do not place unprotected parts directly on the floor to avoid damage.
- Do not stand or sit on the panels.
- Wear gloves during assembly or disassembly to help protect your hands from sharp edges.
- Match each part and piece of hardware with the part numbers shown in this manual.
- If a part does not match the hardware, check the part number and diagram in this manual.
- During assembly, loosely install all screws into the corresponding pre-drilled holes first, then tighten them one by one.
- Periodically check that all screws remain tight during use. Retighten if needed to maintain structural stability.
- If water or other liquid is spilled on the surface, wipe it clean immediately with a dry cloth.
- Keep the product away from sharp objects and corrosive substances to prevent damage.
- Place the item on a level, stable surface during use.

## Warnings

- During assembly, keep all small parts out of the reach of children. Small parts may be fatal if swallowed or inhaled.
- Do not allow children to climb or play on the product. The furniture may tip over and cause serious injury.
- To avoid the risk of suffocation, keep all packaging materials, including plastic bags, film, and foam, away from babies and children.
- Keep sharp objects and corrosive substances away from the product to prevent damage or injury.
- Do not shake or move the product violently during use, as this may cause it to tip over.

# Parts List

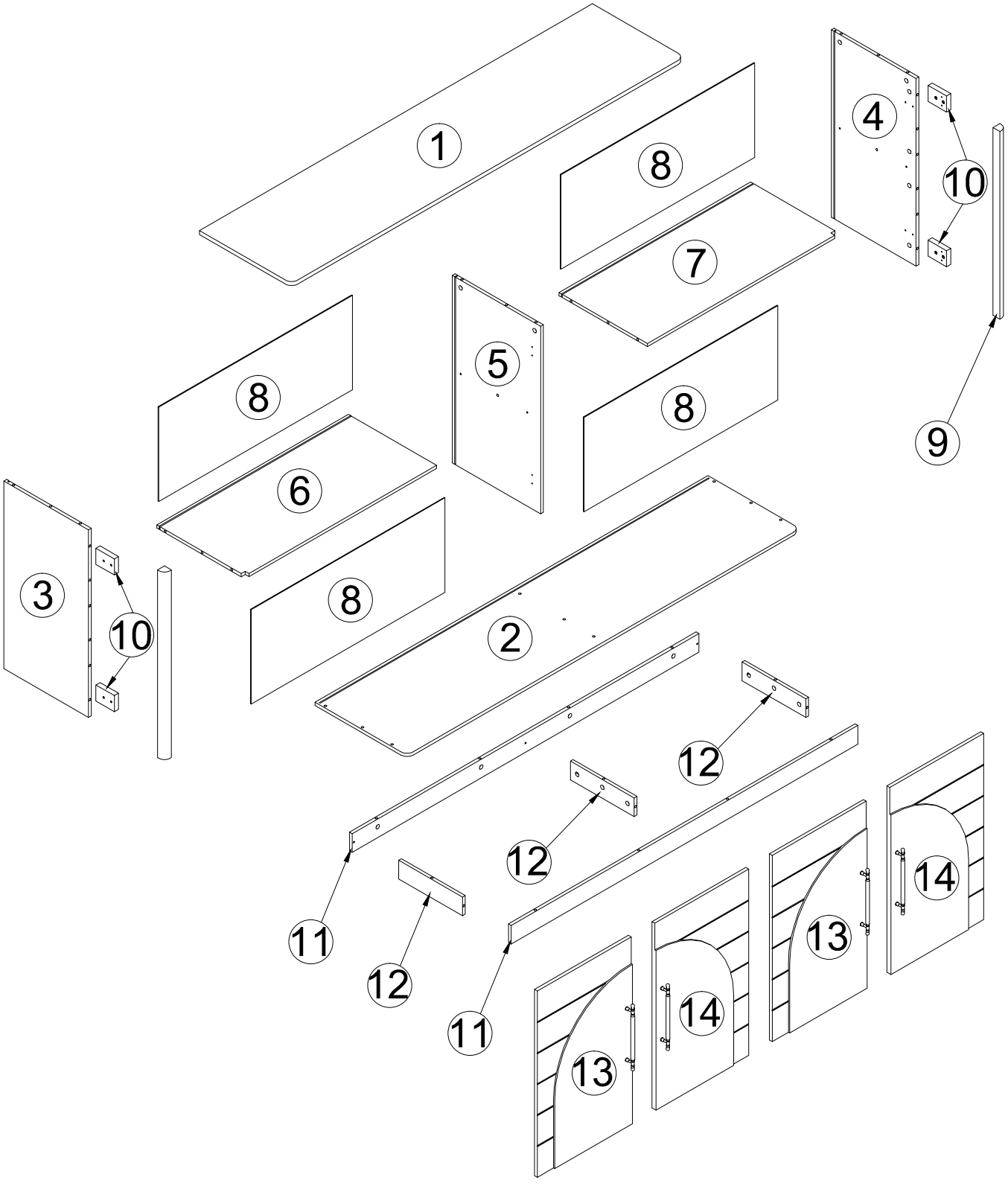

# Parts List

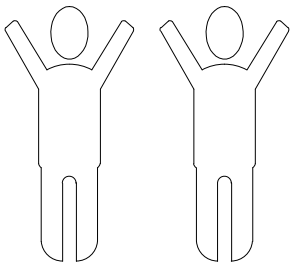

Two people are recommended for assembly.

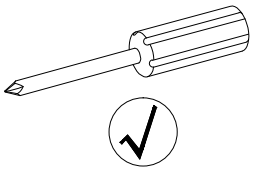

A screwdriver is recommended for assembly.

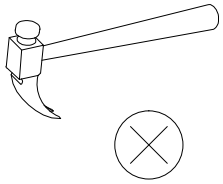

Do not use a hammer, as it may damage thepanels.

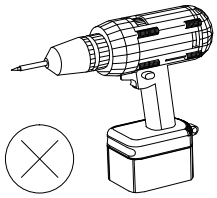

Use of a power drill is not recommended. If used, set the torque to the lowest setting.

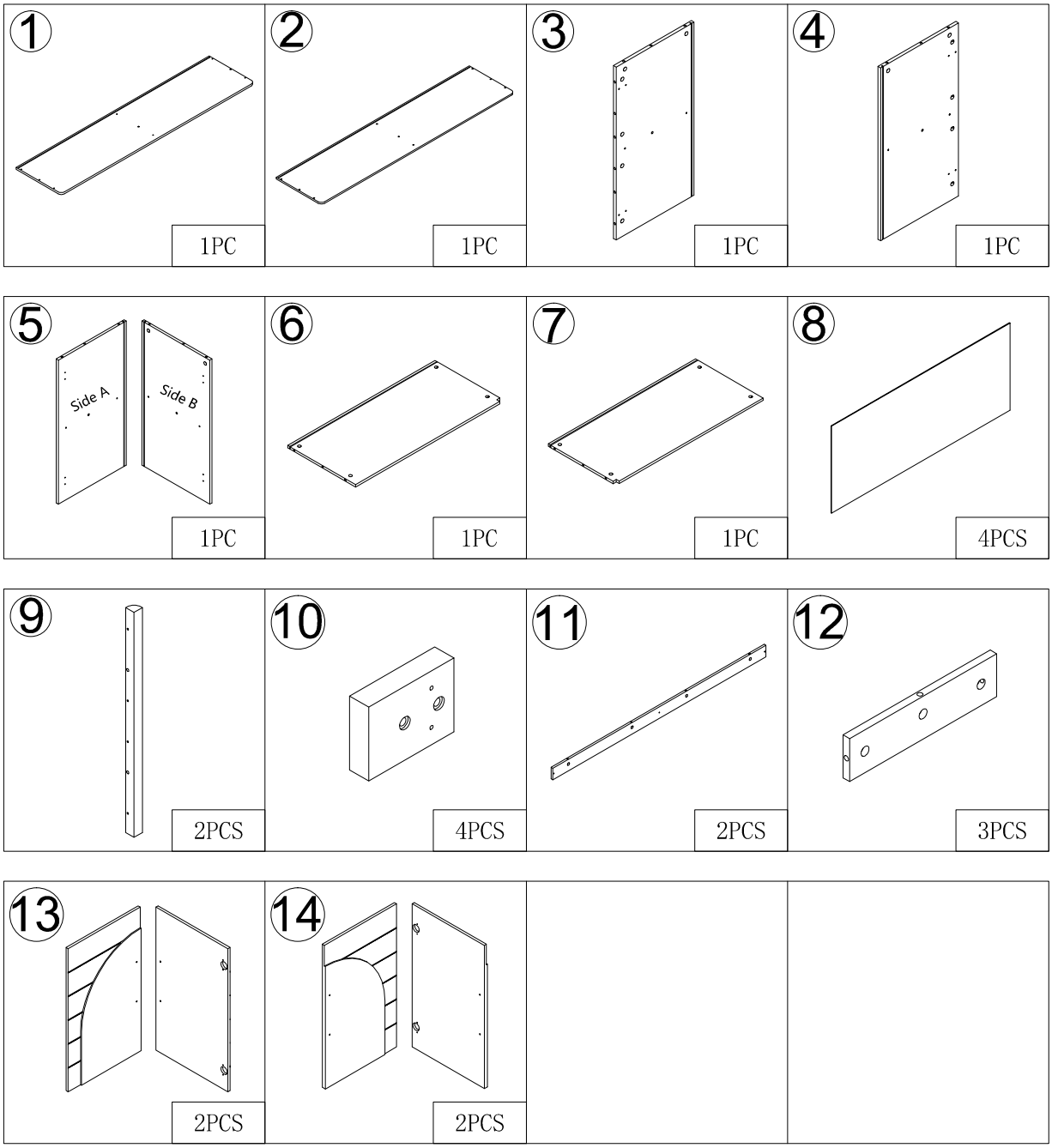

# Hardware List

**No. A**
Qty: 39 (+2 spare)
Cam Bolt
8 x 28 mm

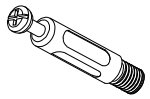

**No. B**
Qty: 39 (+2 spare)
Cam Lock Nut
Ø15 mm

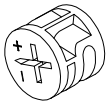

**No. C**
Qty: 22 (+2 spare)
Cover Sticker
Ø20 mm



**No. D**
Qty: 14 (+1 spare)
Wood Dowel
8 x 30 mm

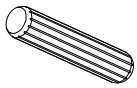

**No. E**
Qty: 4
Door Hinge
(Large Bend)

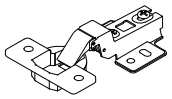

**No. F**
Qty: 4
Door Hinge
(Medium Bend)

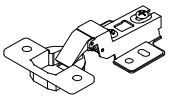

**No. G**
Qty: 48 (+4 spare)
Screw
M3.5 x 12 mm

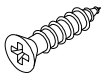

**No. H**
Qty: 6 (+1 spare)
Screw
M6 x 40 mm



**No. I**
Qty: 6 (+1 spare)
Foot Pad
Ø12 mm



**No. J**
Qty: 4
Door Handle

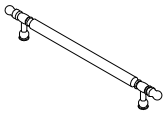

**No. K**
Qty: 8
Screw
M4 x 20 mm

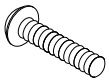

**No. L**
Qty: 8 (+1 spare)
Screw
M5 x 25 mm



**No. M**
Qty: 1
Screwdriver

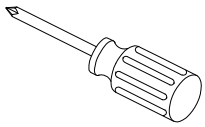

**No. N**
Qty: 1
Allen Key No. 3

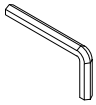

**No. O**
Qty: 1
Allen Key No. 4

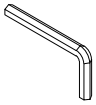

**No. P**
Qty: 16 (+1 spare)
Plastic Wedge Set

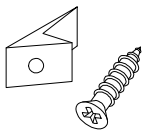

**No. Q**
Qty: 2 kits
Anti-Tip Kit

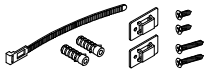

# Cam Bolt and Cam Lock Fastening Instructions

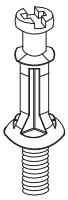

Cam Bolt



Cam Lock

Tools Required

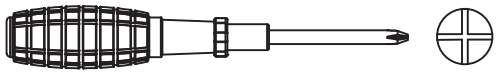

## INSERTING AND TIGHTENING THE CAM BOLT

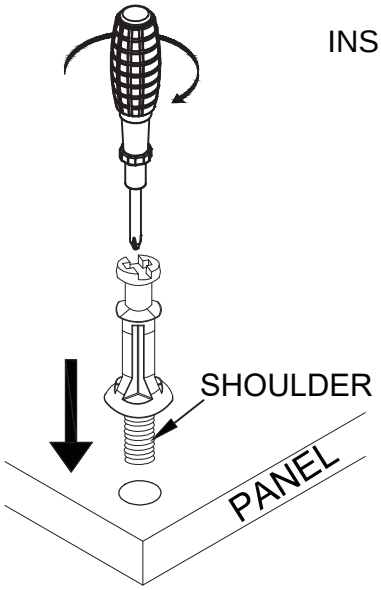


Place the cam bolt into the pre-drilled hole and screw it in vertically

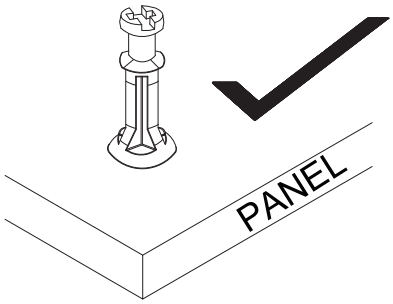


The shoulder should be flush with the panel

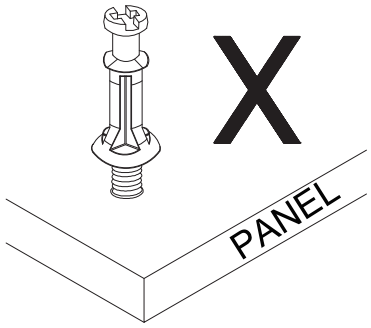


The shoulder is raised above the panel

Insert the cam bolt into the designated pre-drilled hole on the panel. Use a Phillips screwdriver to screw in the cam bolt vertically until the shoulder is flush with the panel.

## INSERTING THE CAM LOCK

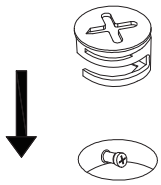

Insert the cam lock with the arrow aligned with the cam bolt head

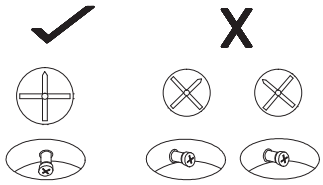

CORRECT INCORRECT

Align the arrow on the cam lock with the cam bolt head, then insert the cam lock. Make sure the cam lock is fully inserted.

## TIGHTENING THE CAM LOCK

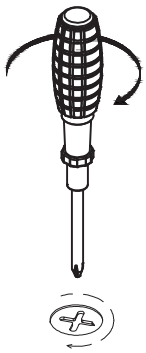

Use a flat-head screwdriver to turn the cam lock clockwise until it locks onto the cam bolt head. Turn until snug, about 3/4 turn. Do not overtighten, as this may damage the cam lock and cam bolt.

# STEP 1

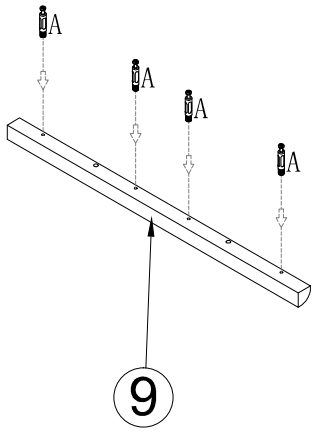


×2

INSERTING AND TIGHTENING THE CAM BOLT

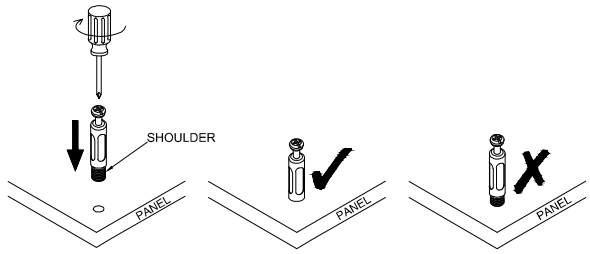


Insert the cam bolt into the pre-drilled hole and screw it in vertically

The shoulder should be flush with the panel

The shoulder is raised above the panel

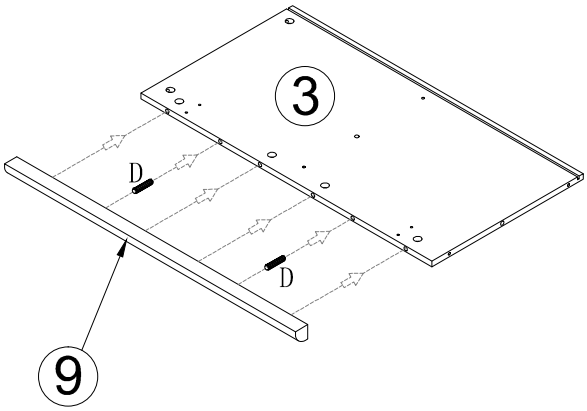


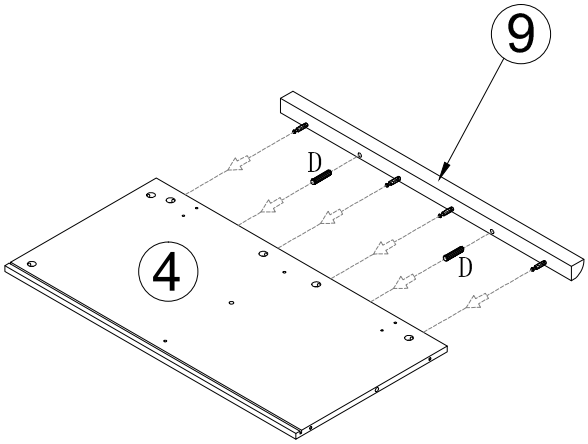


INSERTING THE CAM LOCK

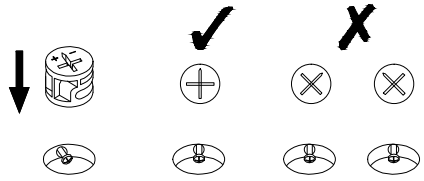

Insert the cam lock with the arrow aligned with the cam bolt head

CORRECT

INCORRECT

Align the arrow on the cam lock with the cam bolt head, then insert the cam lock. Make sure the cam lock is fully inserted.

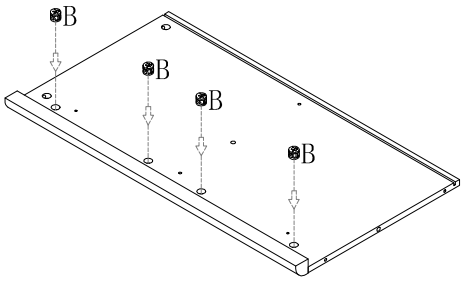


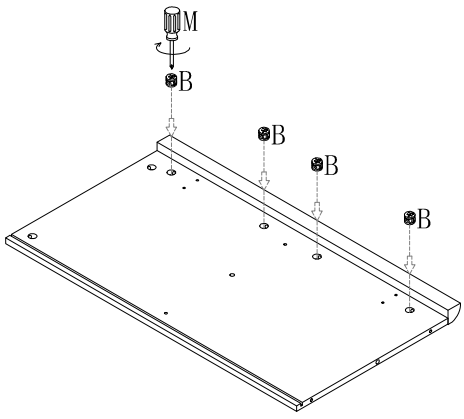


| | |
|---|---|
|  | A×8PCS |
|  | B×8PCS |
| 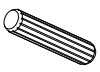 | D×4PCS |

# STEP 2

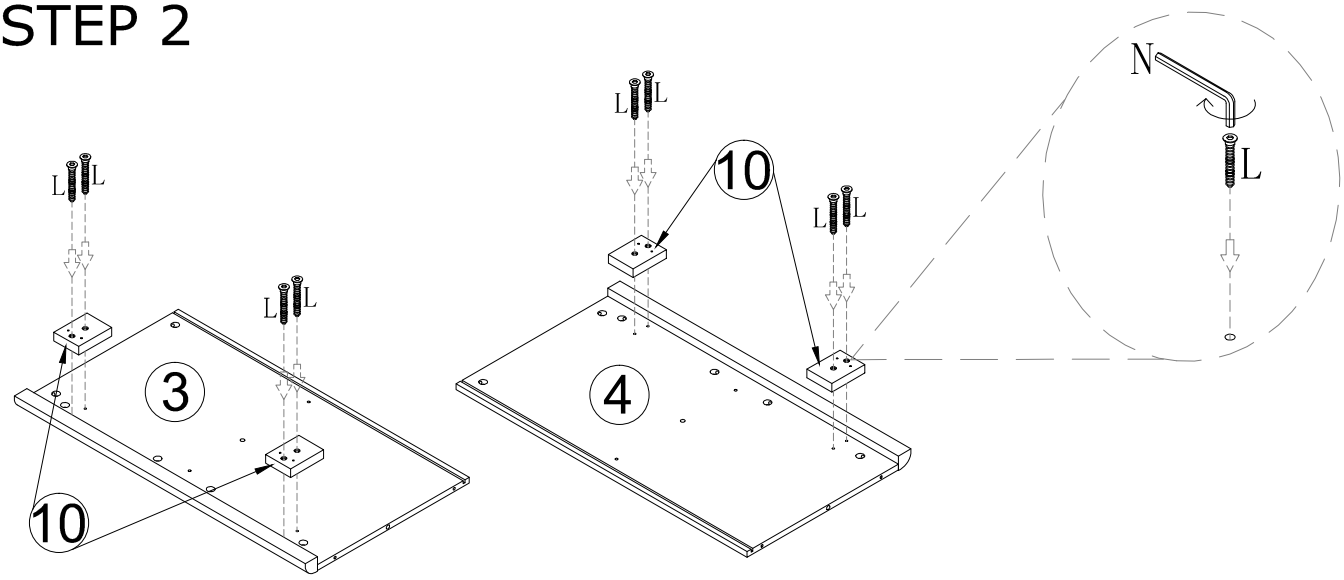


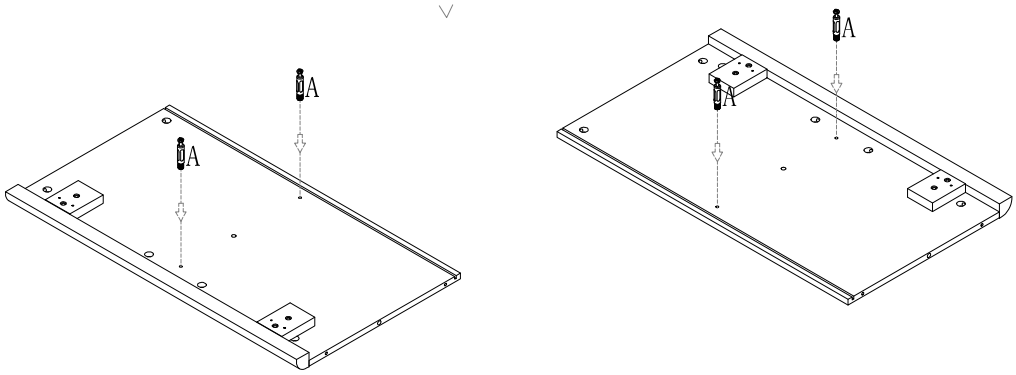


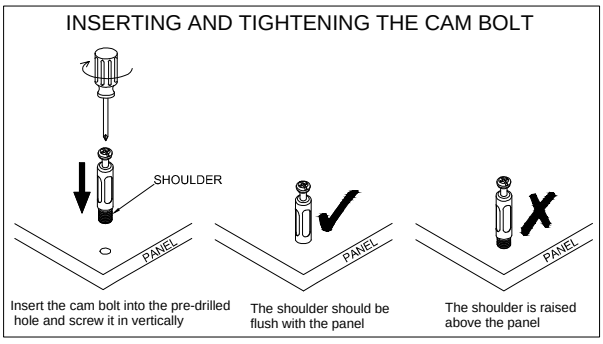


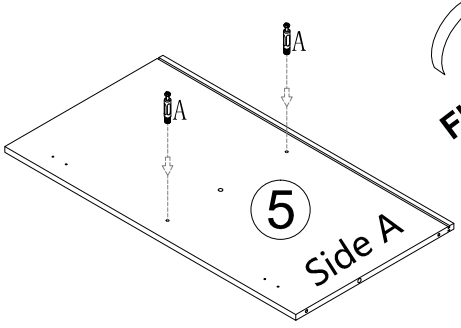


Flip to the other side.

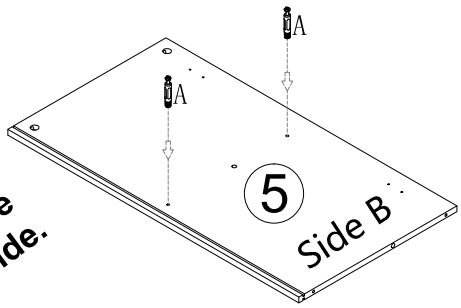


| | |
|---|---|
|  | A×8PCS |
|  | L×8PCS |
|  | N×1PC |

# STEP 3

Pay attention to the orientation during assembly.
Make sure the cam lock holes for the top panel are on the upper rear side.

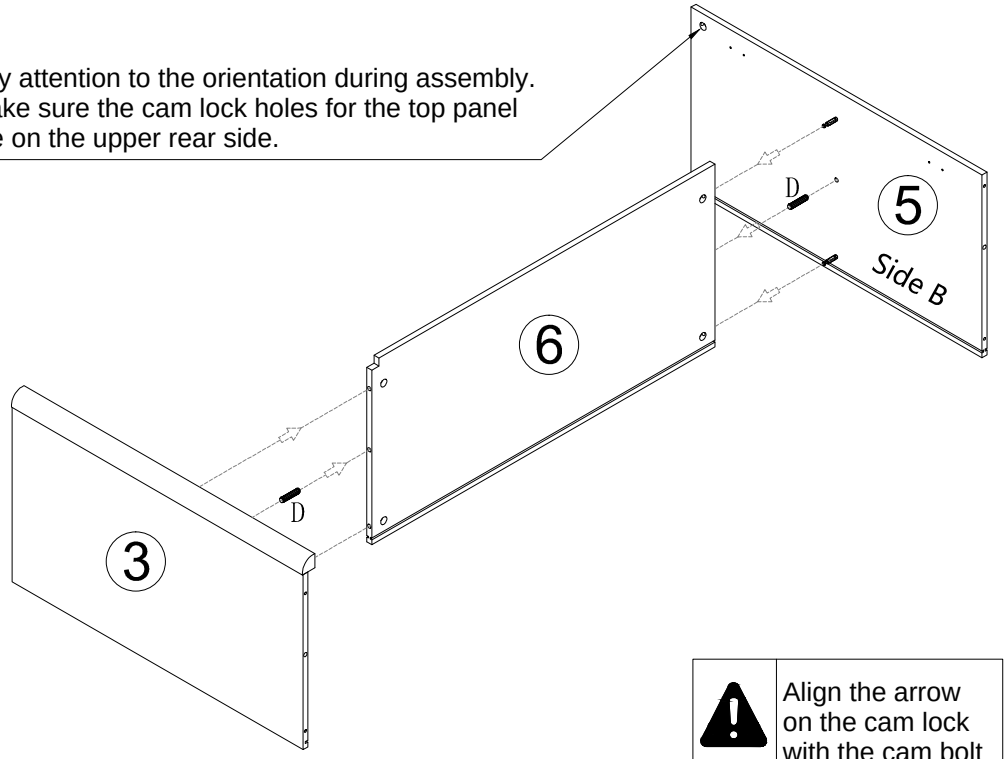


Align the arrow on the cam lock with the cam bolt head, then insert the cam lock. Make sure the cam lock is fully inserted.

INSERTING THE CAM LOCK

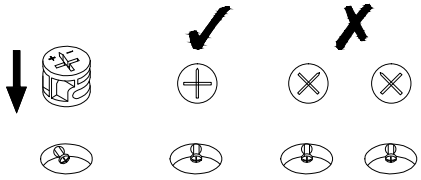

Insert the cam lock with the arrow aligned with the cam bolt head

CORRECT

INCORRECT

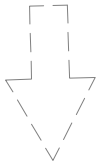

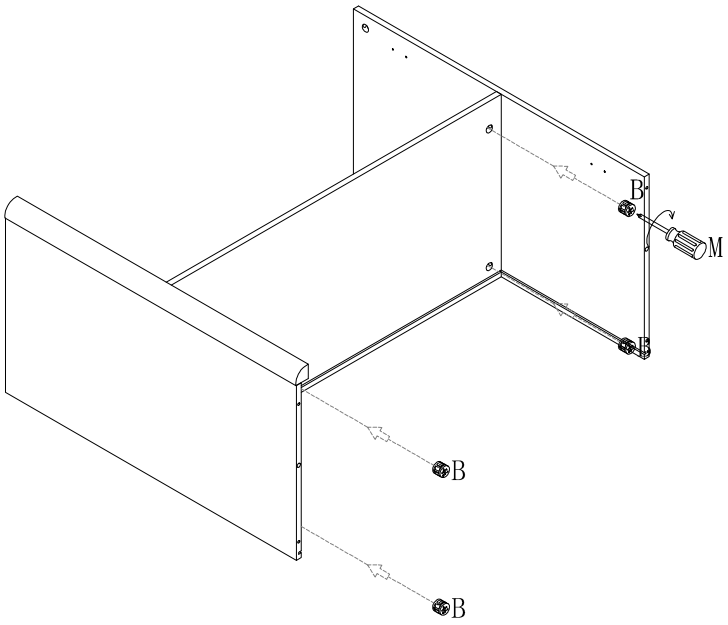


| | |
|---|---|
|  | B×4PCS |
| 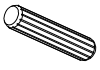 | D×2PCS |

# STEP 4

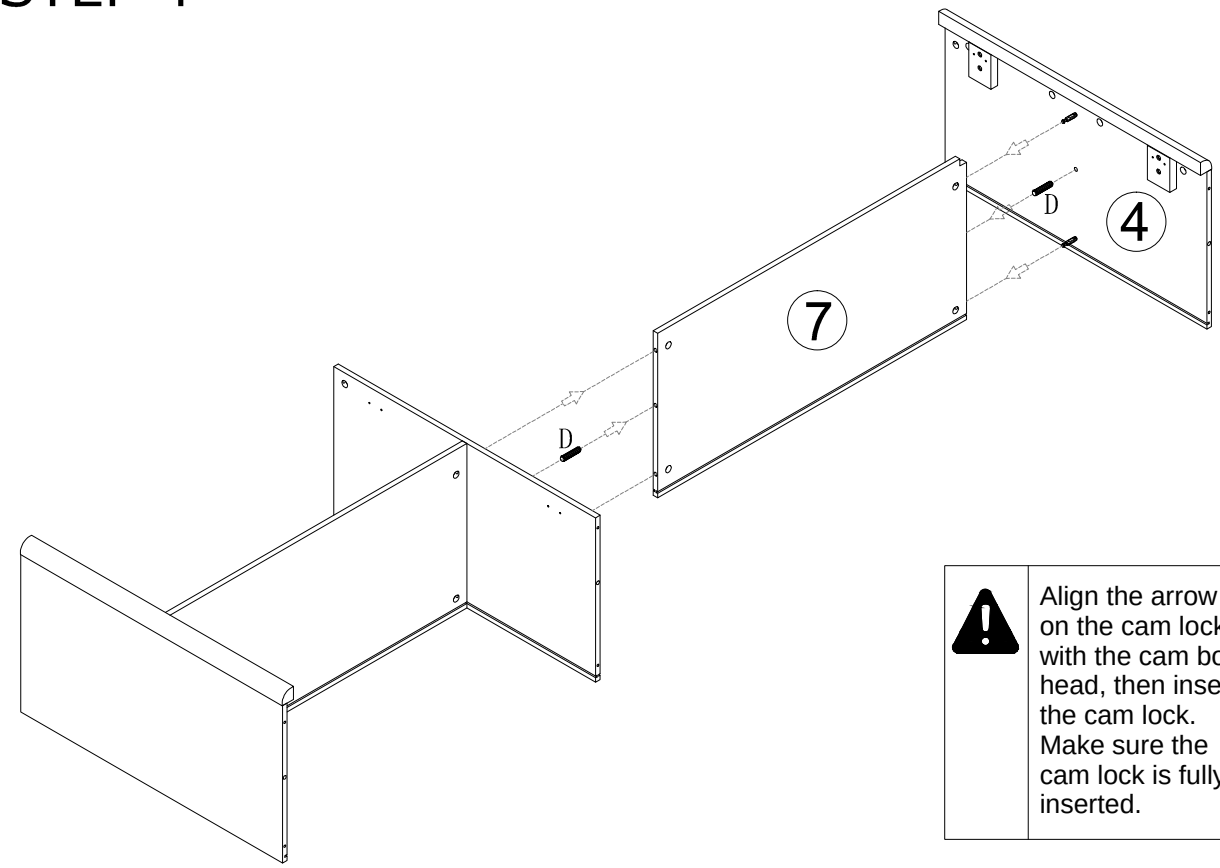


Align the arrow on the cam lock with the cam bolt head, then insert the cam lock. Make sure the cam lock is fully inserted.

INSERTING THE CAM LOCK

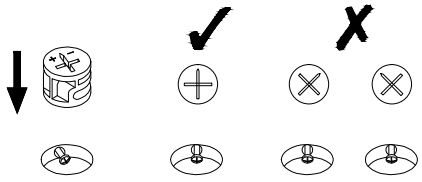

Insert the cam lock with the arrow aligned with the cam bolt head

CORRECT

INCORRECT

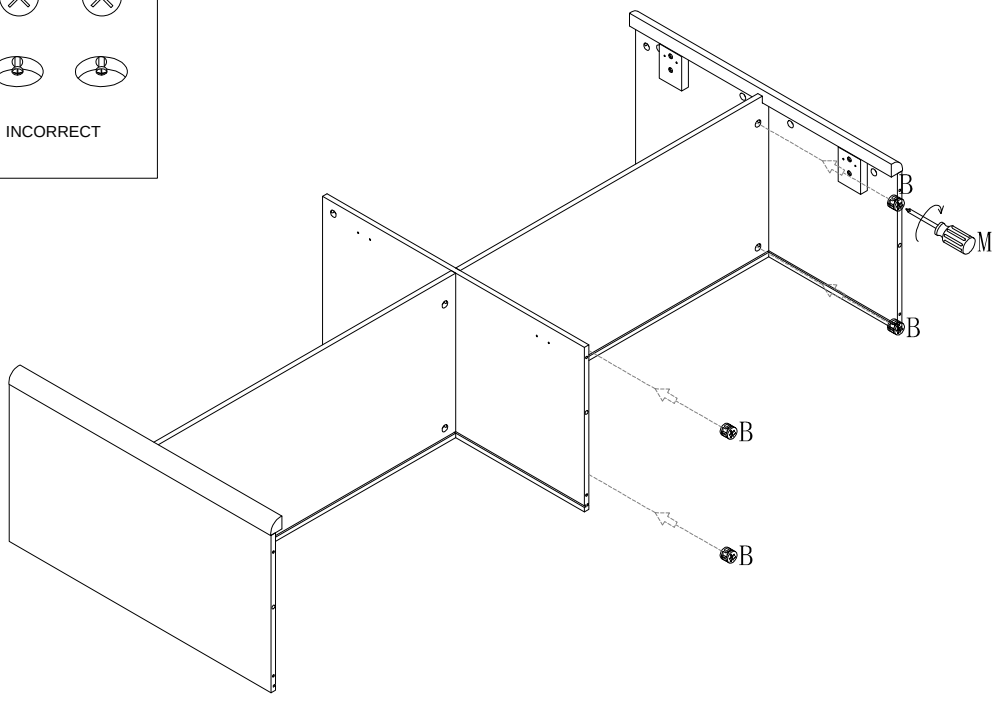


| | |
|---|---|
|  | B×4PCS |
| 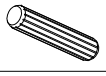 | D×2PCS |

# STEP 5

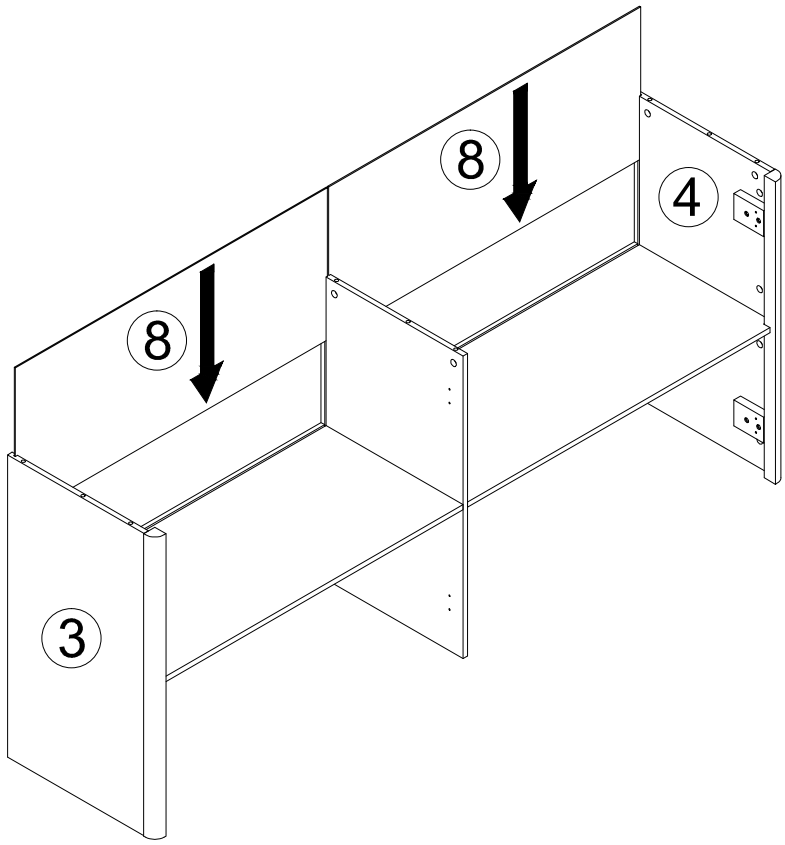


# STEP 6

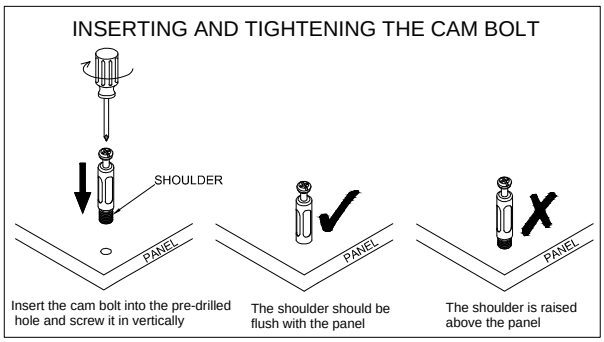


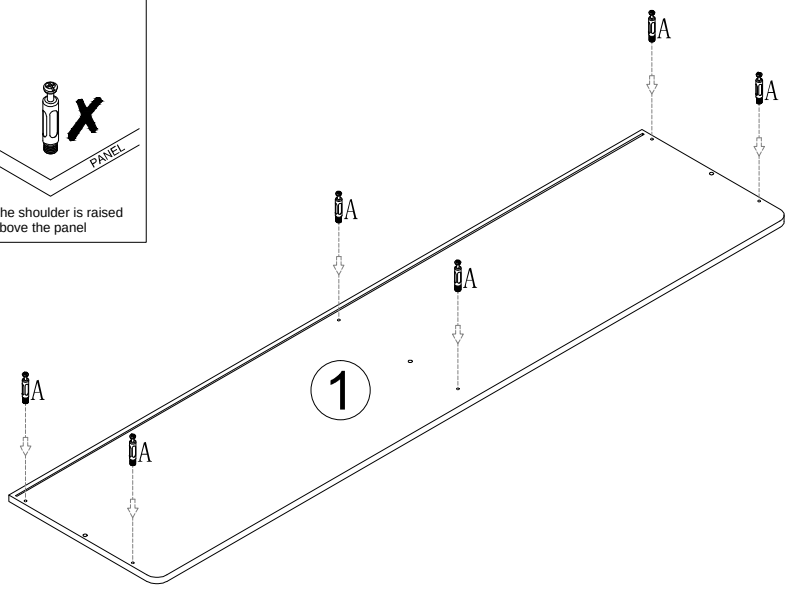


| | |
|---|---|
|  | A×6PCS |

# STEP 7

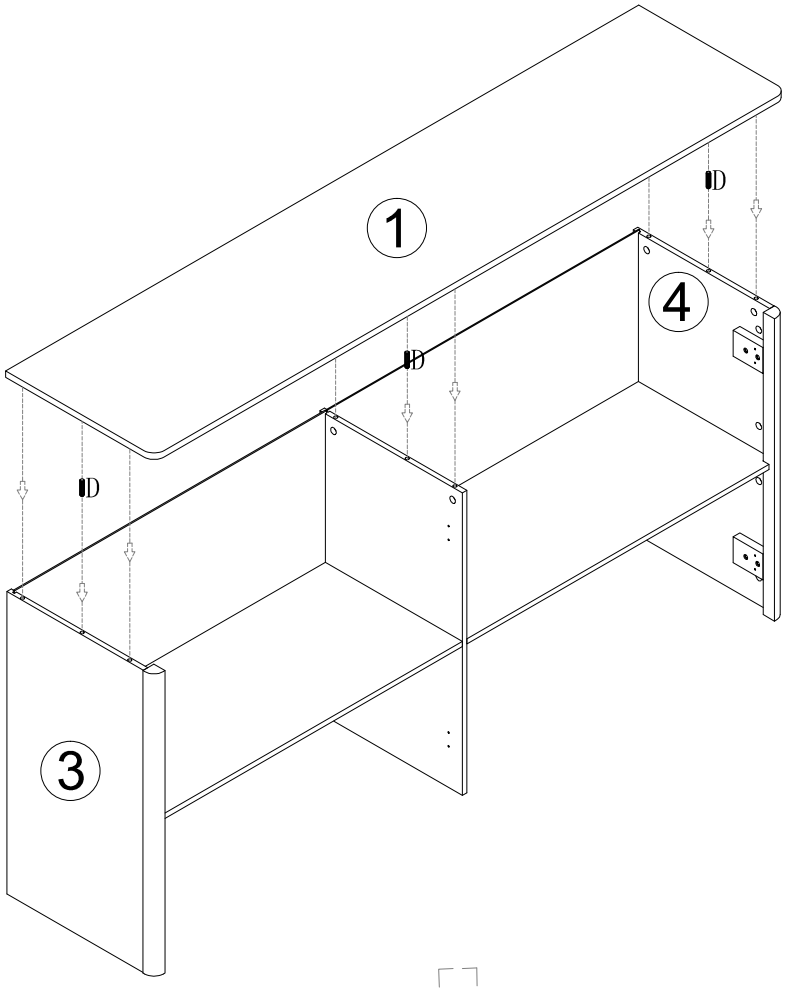


Align the arrow on the cam lock with the cam bolt head, then insert the cam lock. Make sure the cam lock is fully inserted.

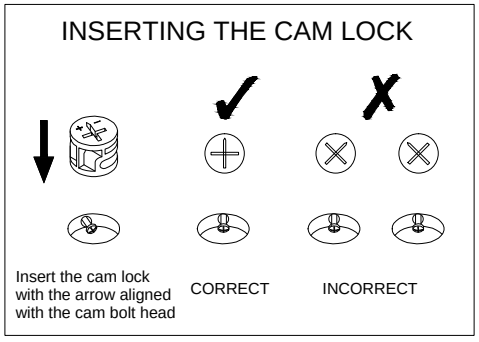


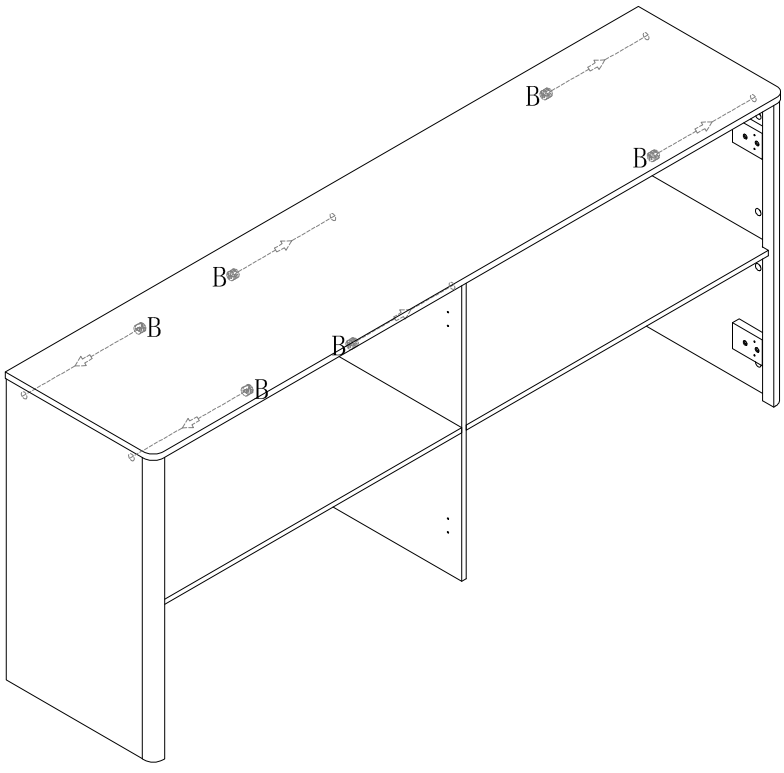


| | |
|---|---|
|  | B×6PCS |
| 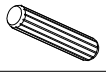 | D×3PCS |

# STEP 8

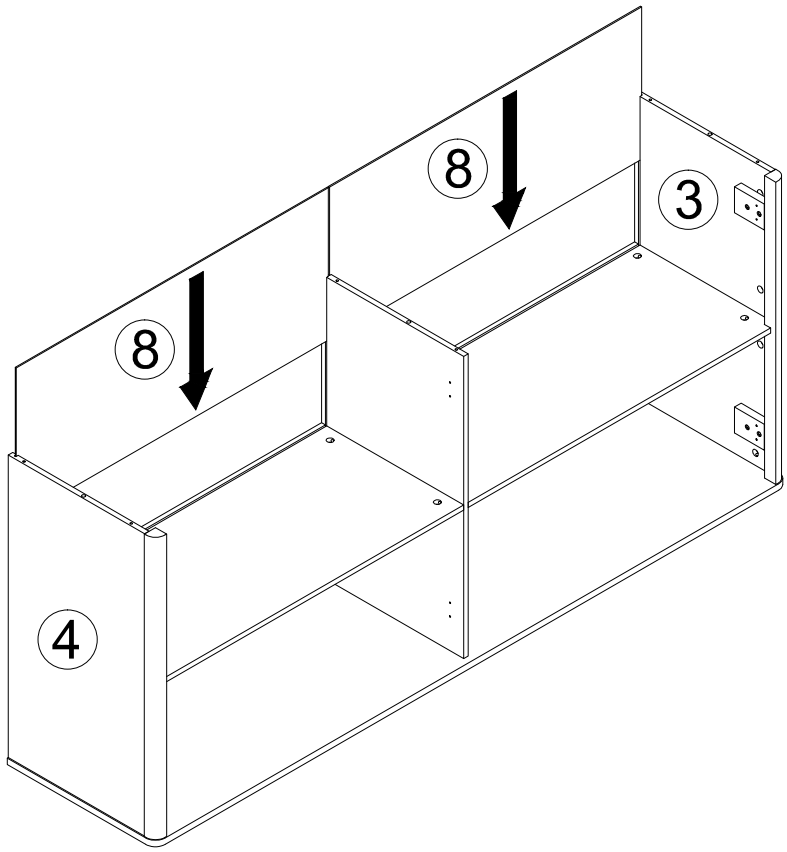
8
8
3
4

# STEP 9

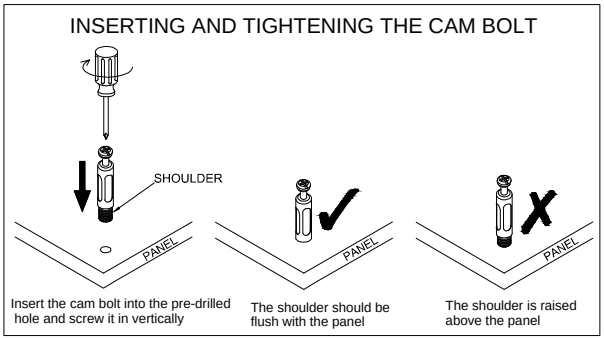
INSERTING AND TIGHTENING THE CAM BOLT
SHOULDER
PANEL
PANEL
PANEL
Insert the cam bolt into the pre-drilled hole and screw it in vertically
The shoulder should be flush with the panel
The shoulder is raised above the panel

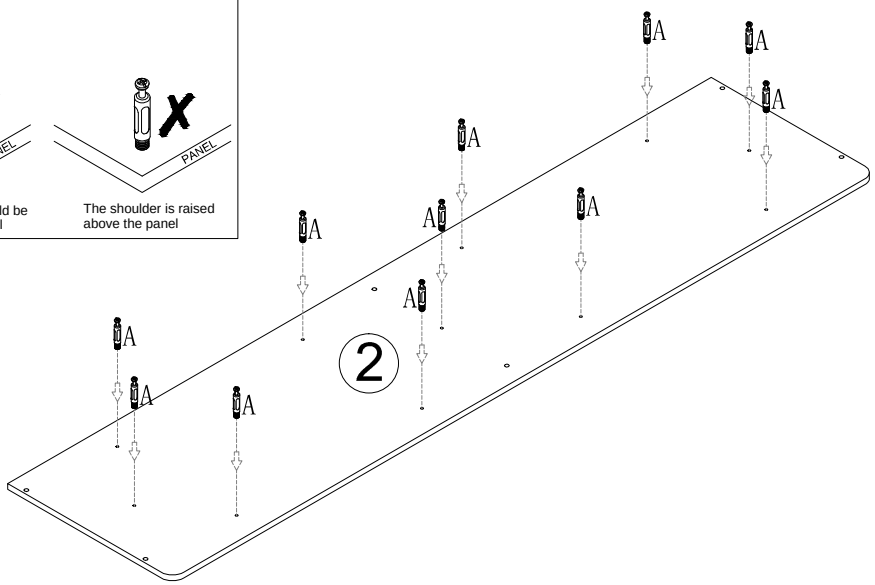
A
2

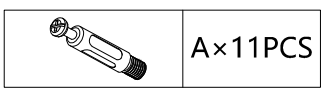
A×11PCS

# STEP 10

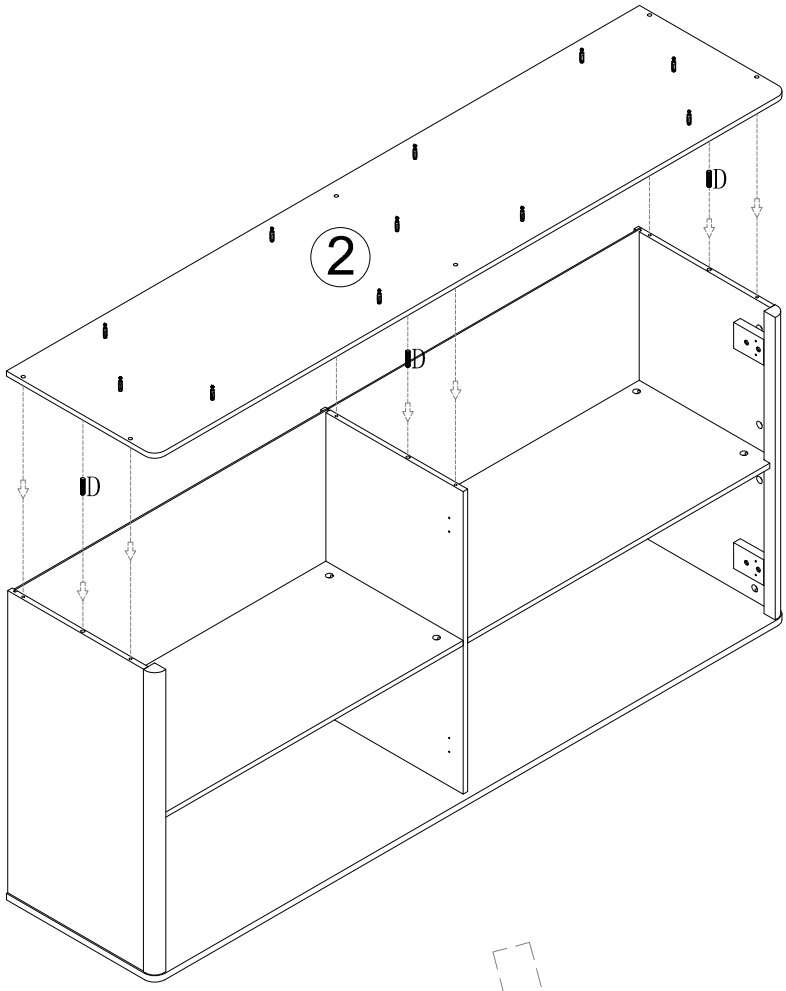


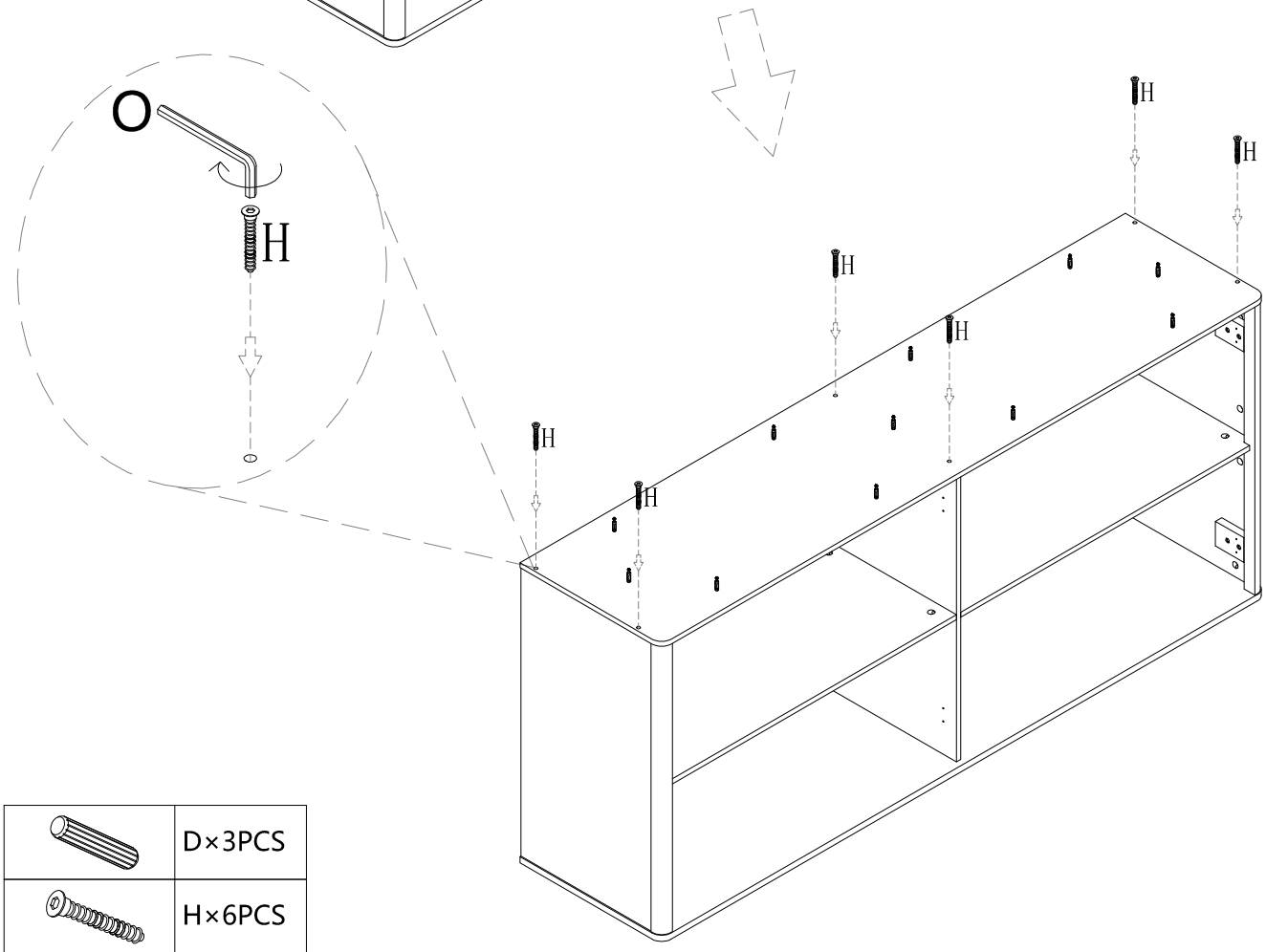


| | |
|---|---|
| | D×3PCS |
| | H×6PCS |
| | O×1PC |

# STEP 11

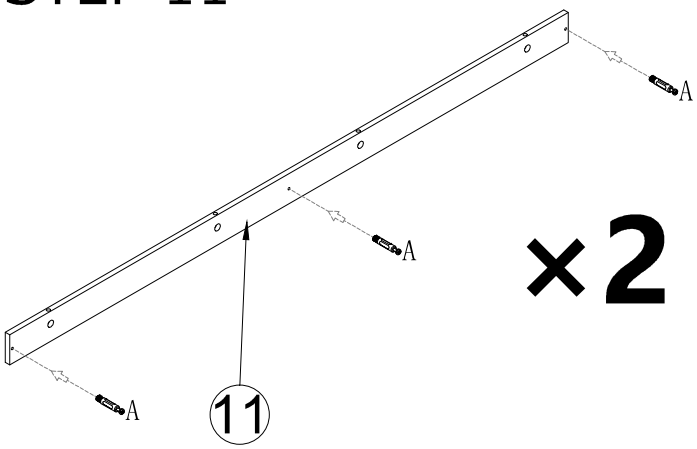


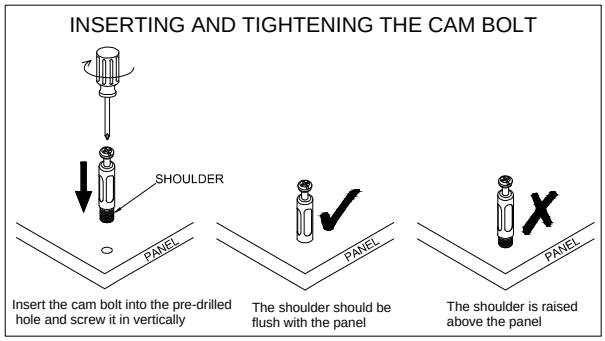


Install Part 12 with the guide holes facing up.

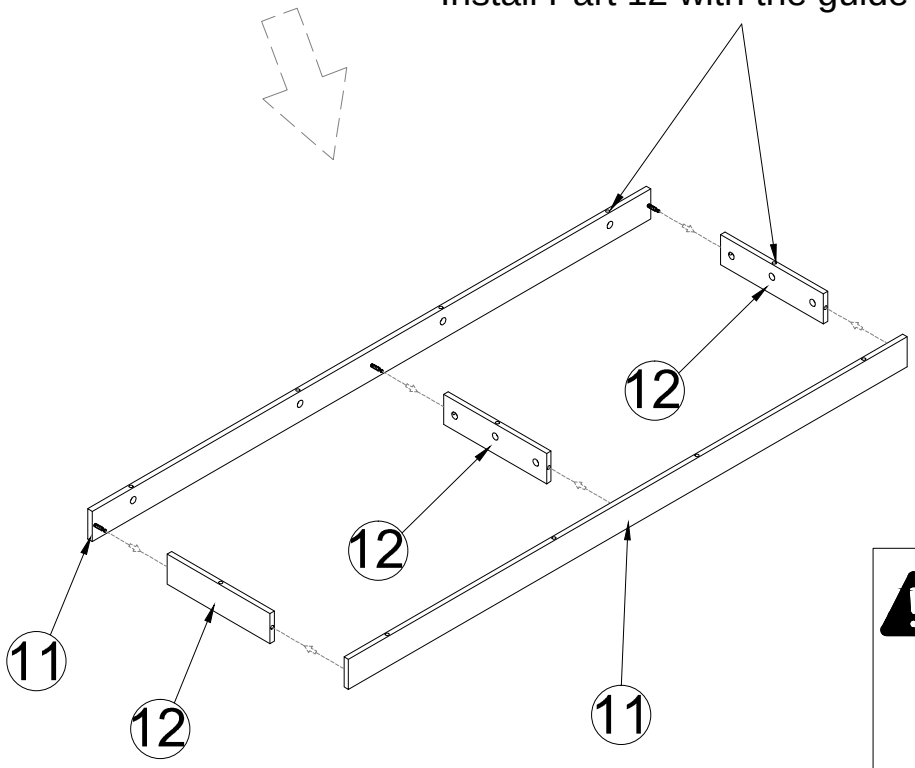


Align the arrow on the cam lock with the cam bolt head, then insert the cam lock. Make sure the cam lock is fully inserted.

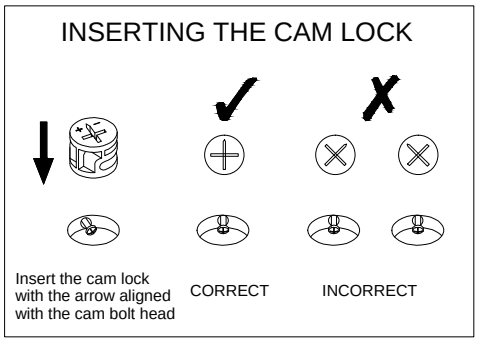


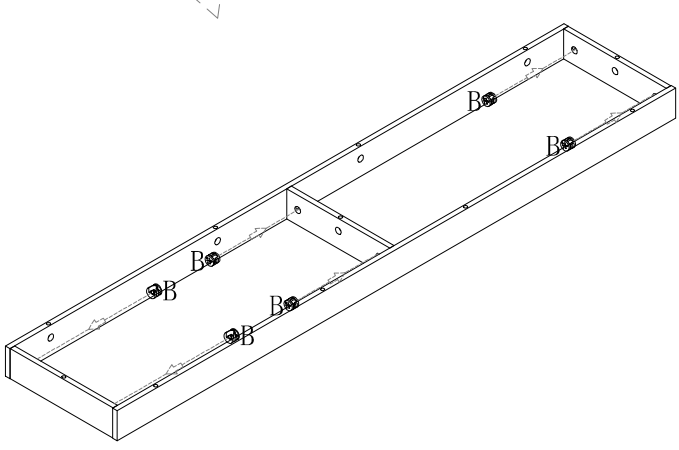


| | |
|---|---|
|  | A×6PCS |
|  | B×6PCS |

# STEP 12

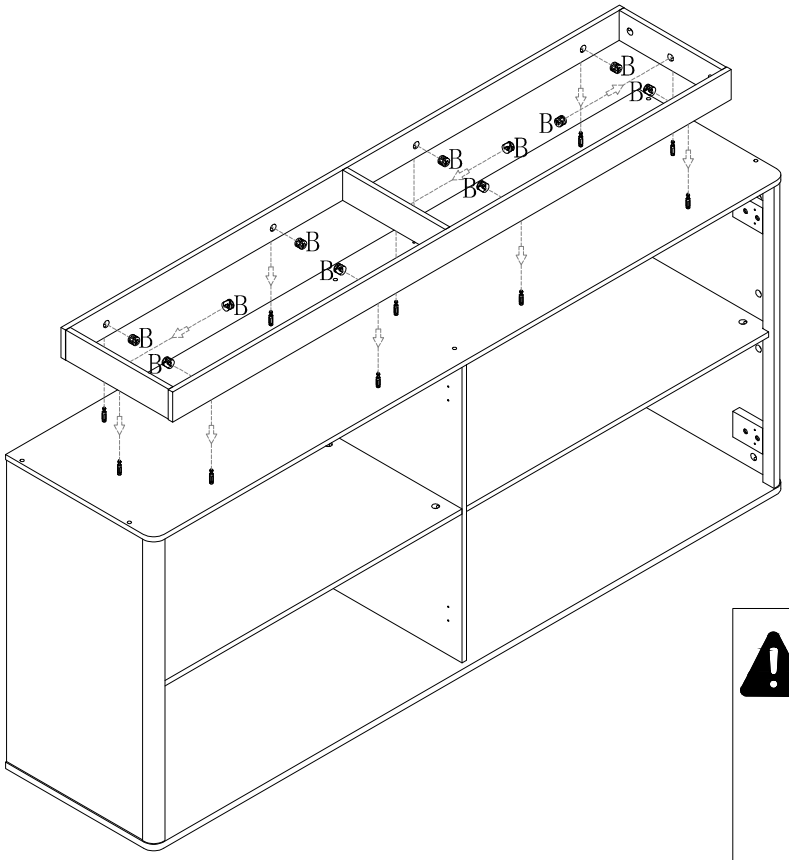


Align the arrow on the cam lock with the cam bolt head, then insert the cam lock. Make sure the cam lock is fully inserted.

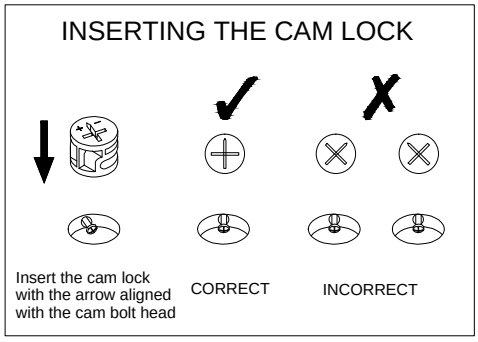


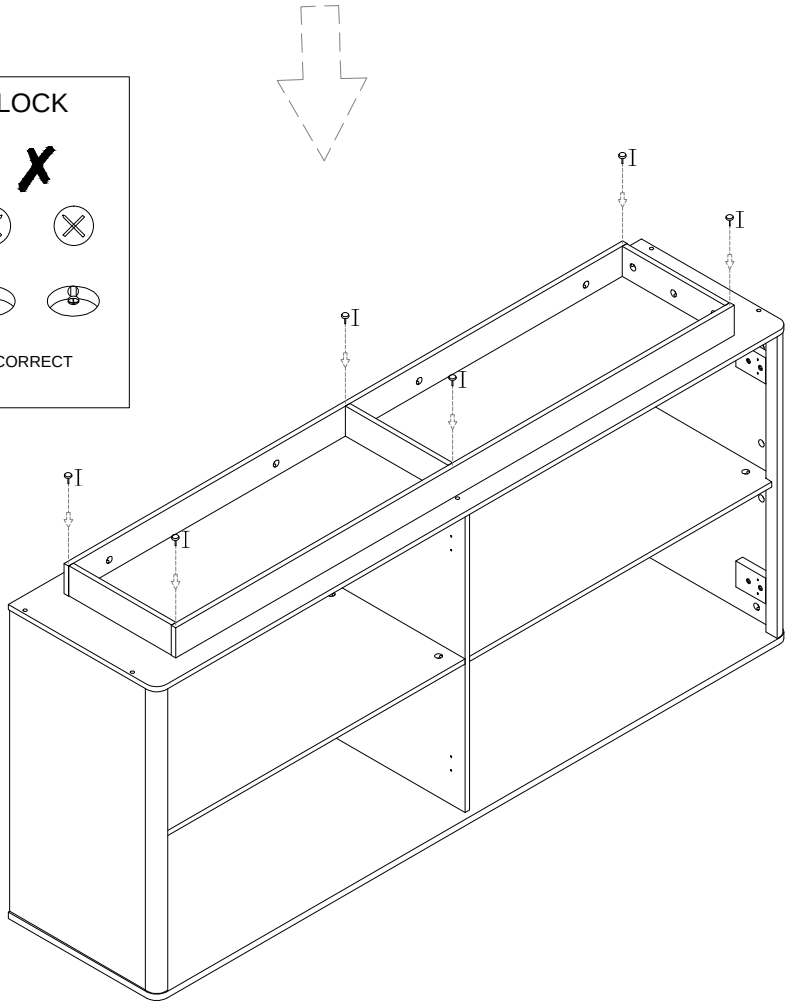


| | |
|---|---|
|  | B×11PCS |
|  | I×6PCS |

# STEP 13

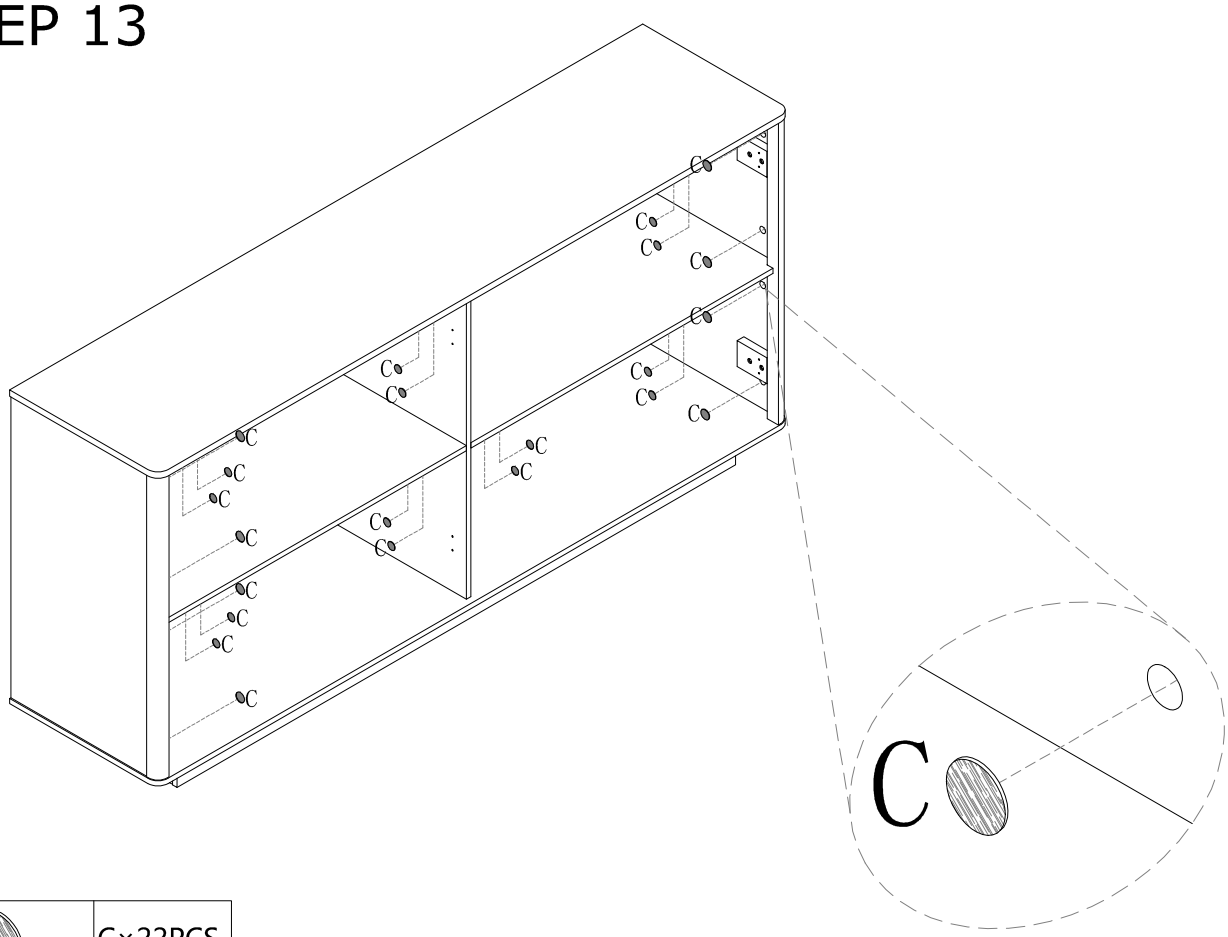


| | |
|---|---|
|  | C×22PCS |

# STEP 14

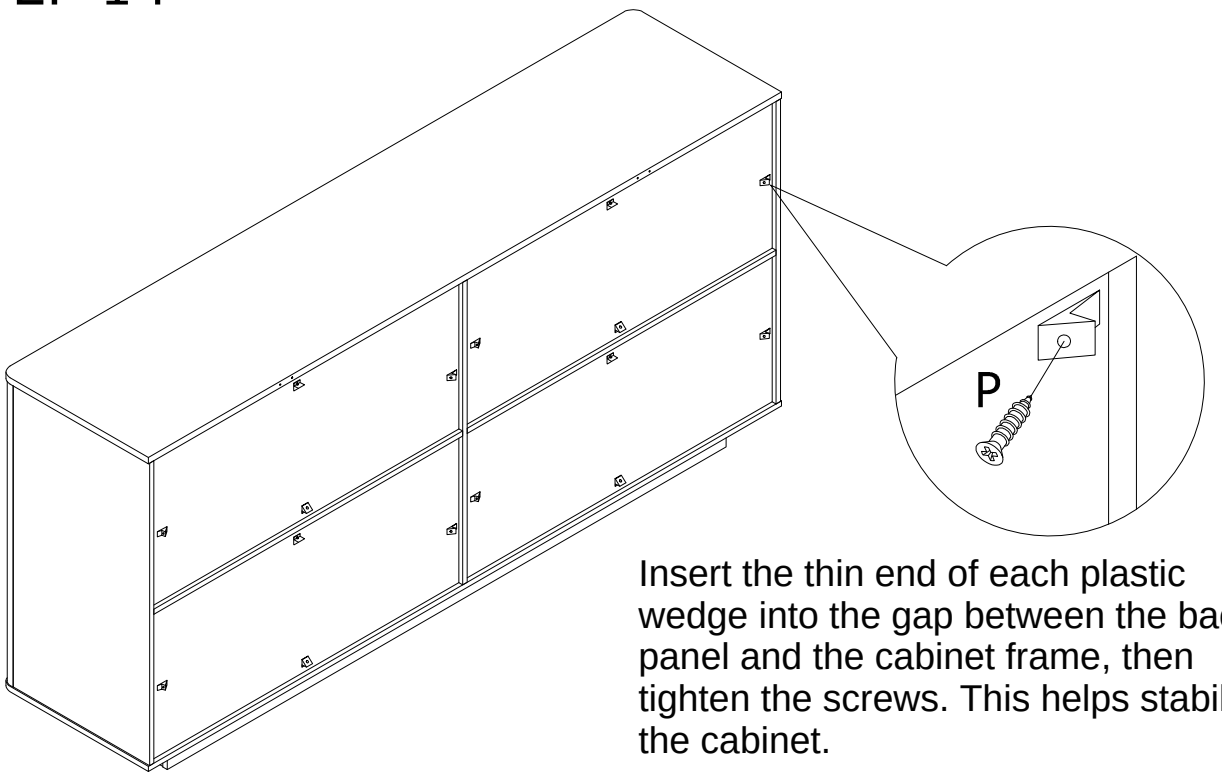


Insert the thin end of each plastic wedge into the gap between the back panel and the cabinet frame, then tighten the screws. This helps stabilize the cabinet.

| | |
|---|---|
|  | P×16Sets |

## Hinge Adjustment (Door Alignment)

Scan the QR code to watch the hinge adjustment video.

If you notice any of the issues below, follow these steps:

Front screw: Adjusts the gap between the door and the side panel (left/right).

Rear screw: Adjusts the door position front-to-back (in/out).

15-A. When the door panel sticks out past the side panel.

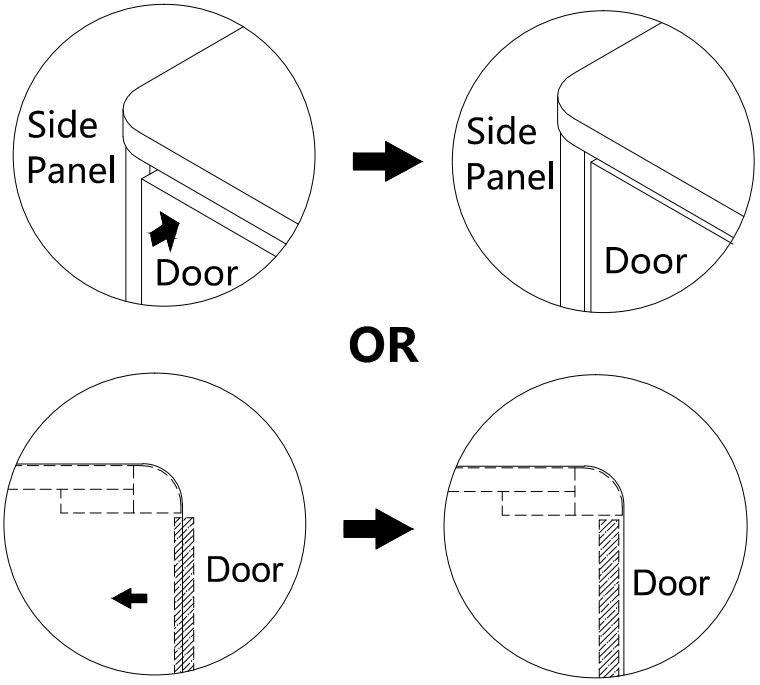


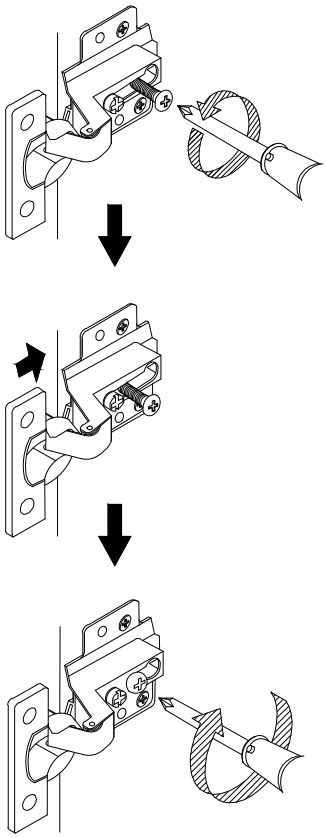

If the gap between the side panel and the door is too large, or if the door sticks out past the edge of the side panel, loosen the rear screw as shown. Adjust the door inward using the hinge, then tighten the rear screw once the door is properly aligned.

15-B. When the door panel is recessed behind the side panel.

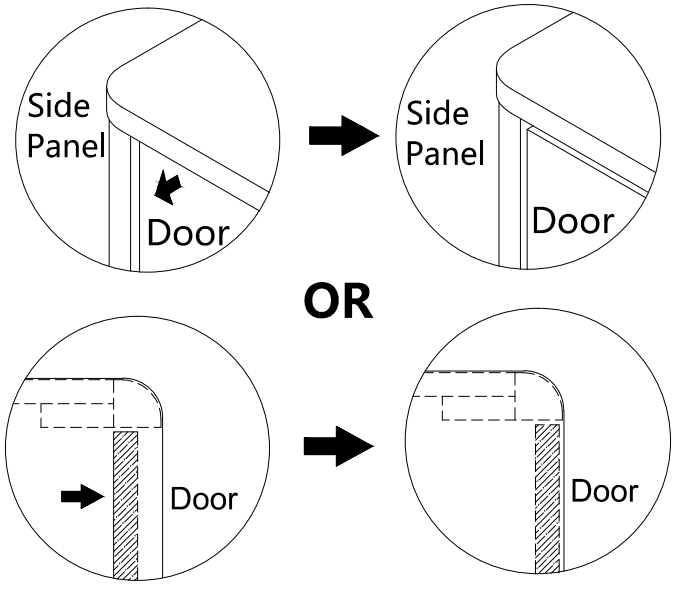


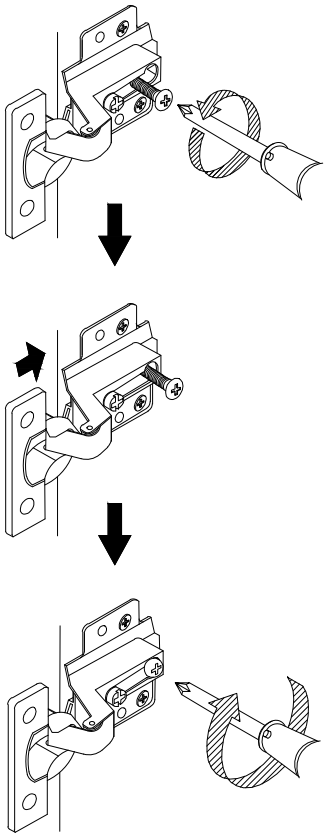

If the gap between the side panel and the door is too small, or if the door is recessed behind the side panel, loosen the rear screw as shown. Adjust the door outward using the hinge, then tighten the rear screw once the door is properly aligned.

15-C

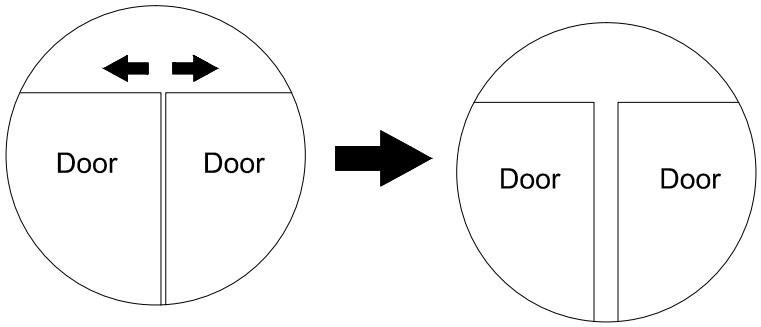


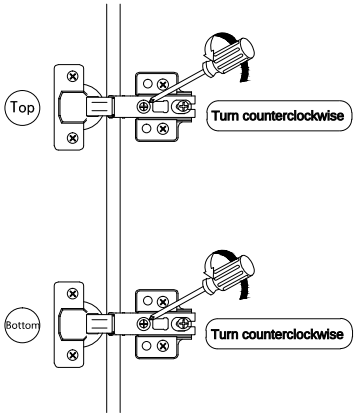


If the gap between the two doors is too small, adjust the front screw as shown.

15-D

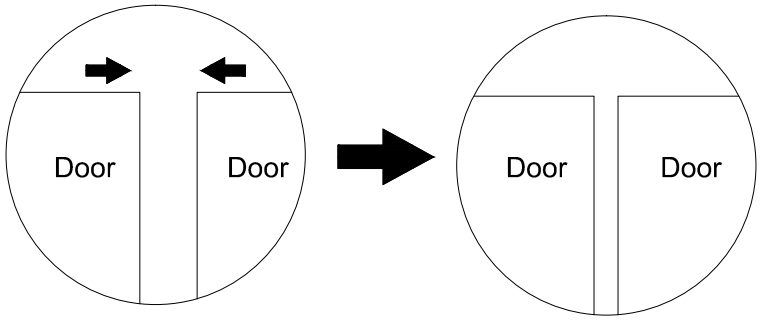


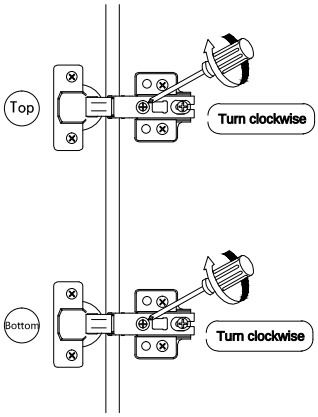


If the gap between the two doors is too large, adjust the front screw as shown.

15-E

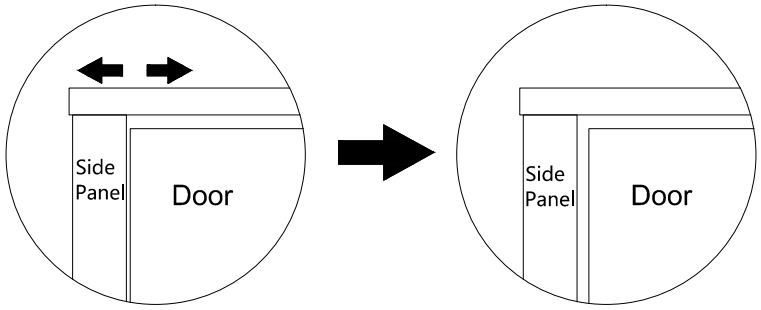


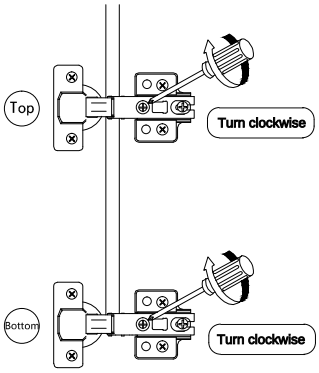


If the gap between the door and the side panel is too small, tighten the front screw as shown.

15-F

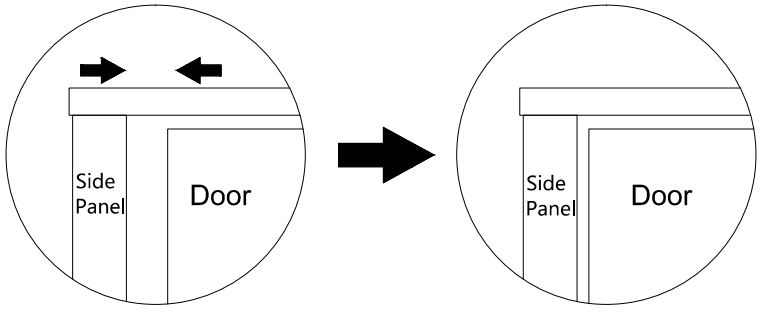


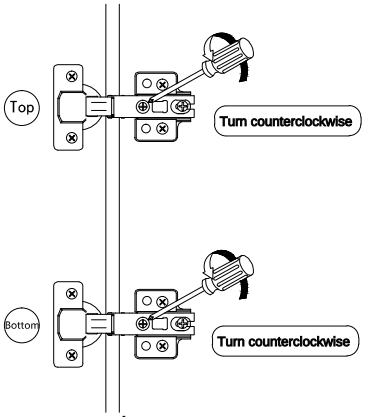


If the gap between the door and the side panel is too large, loosen the front screw as shown.

## 15-G. When the door is tilted at the top

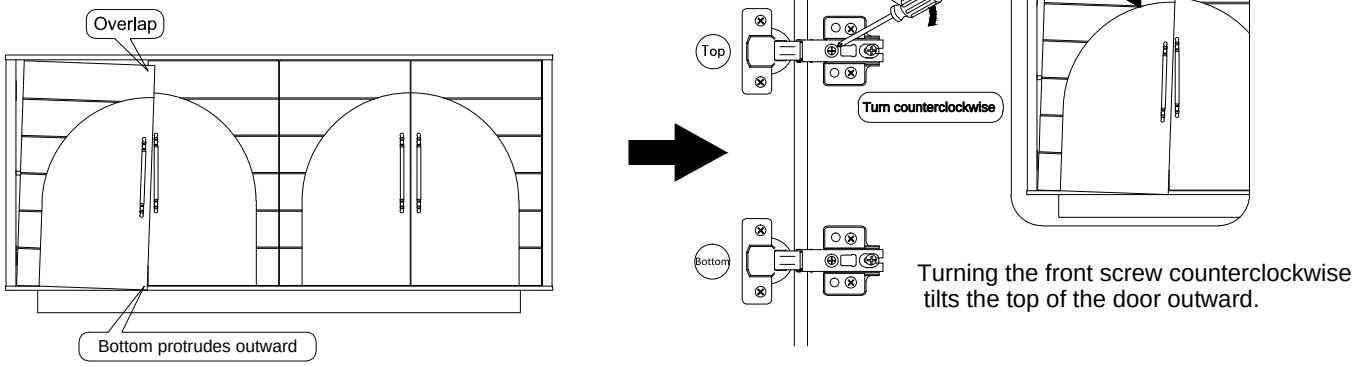


Turning the front screw counterclockwise tilts the top of the door outward.

## 15-H. When the door is tilted at the bottom

Turning the front screw counterclockwise tilts the bottom of the door outward.

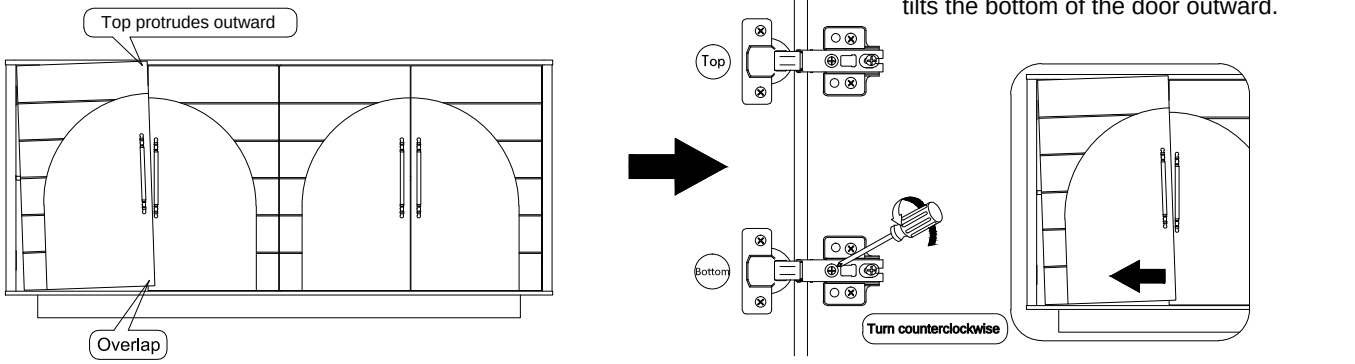


## 15-I. When the doors are not level

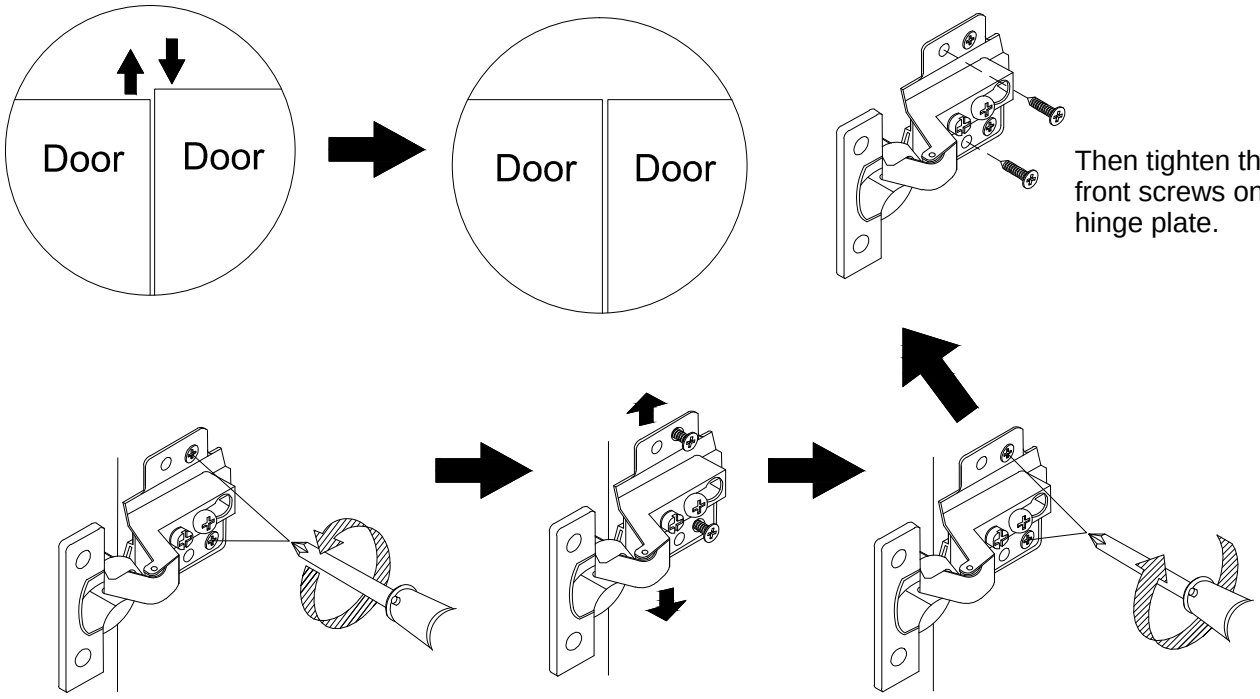


Then tighten the two front screws on the hinge plate.

If the doors are not level, loosen the two rear screws on the hinge plate. Adjust the door up or down, then retighten the two rear screws once the doors are aligned. After all door panels are in place, tighten the two front screws on each hinge plate.

# STEP 16

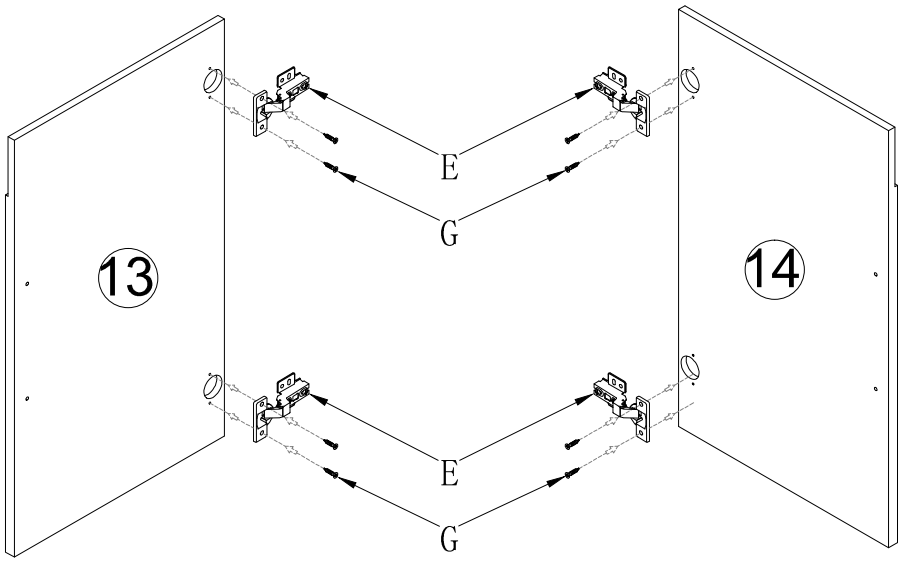


Before installing the door panels, read the hinge adjustment instructions carefully. These tips can help you resolve common door alignment issues.

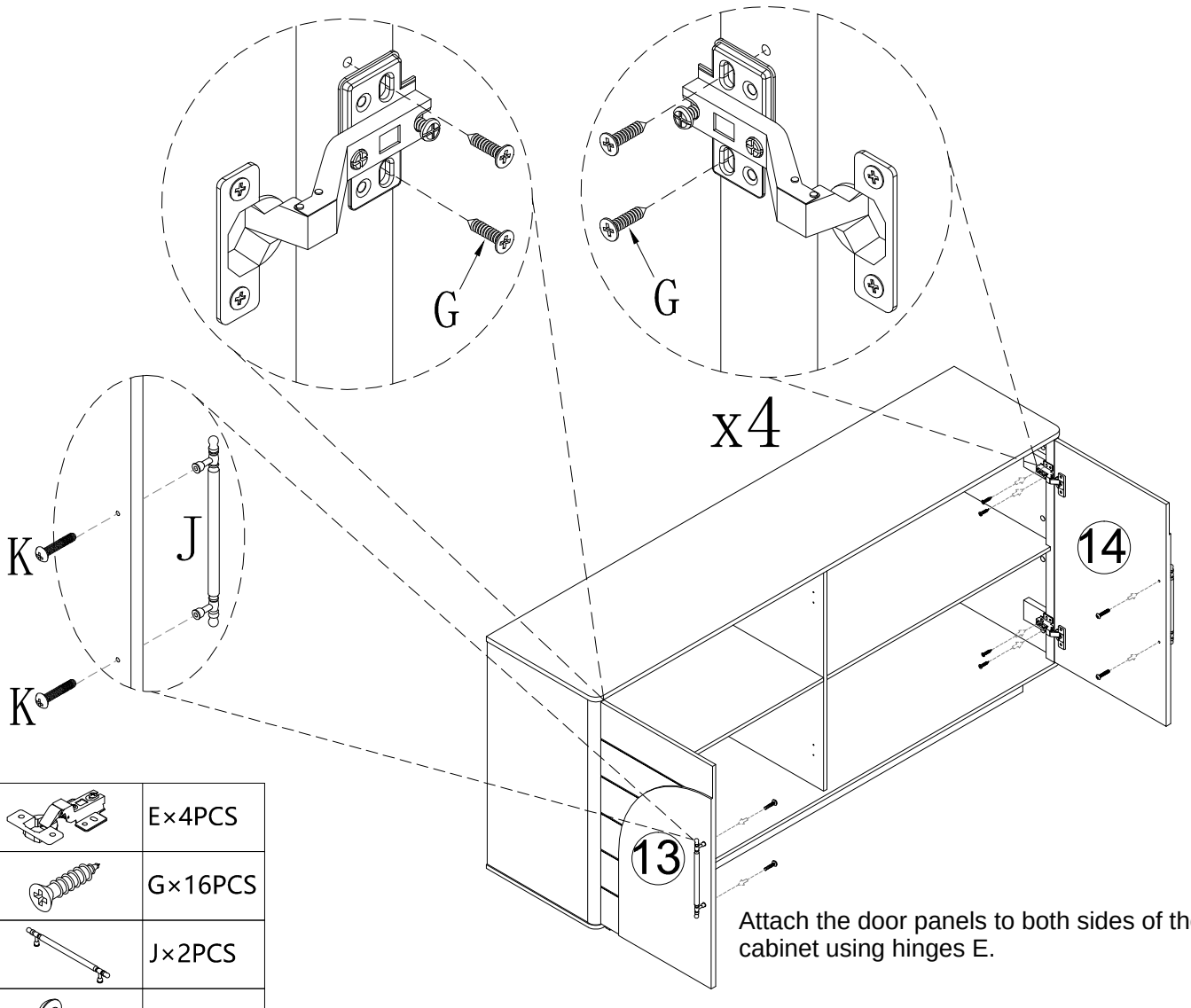


| | |
|---|---|
|  | E×4PCS |
|  | G×16PCS |
|  | J×2PCS |
|  | K×4PCS |

Attach the door panels to both sides of the cabinet using hinges E.

# STEP 17

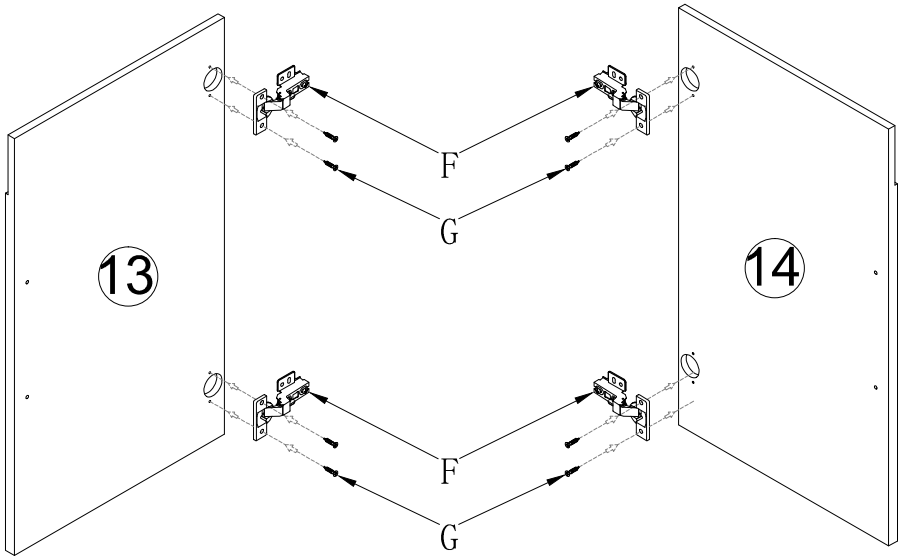


Before installing the door panels, read the hinge adjustment instructions carefully. These tips can help you resolve common door alignment issues.

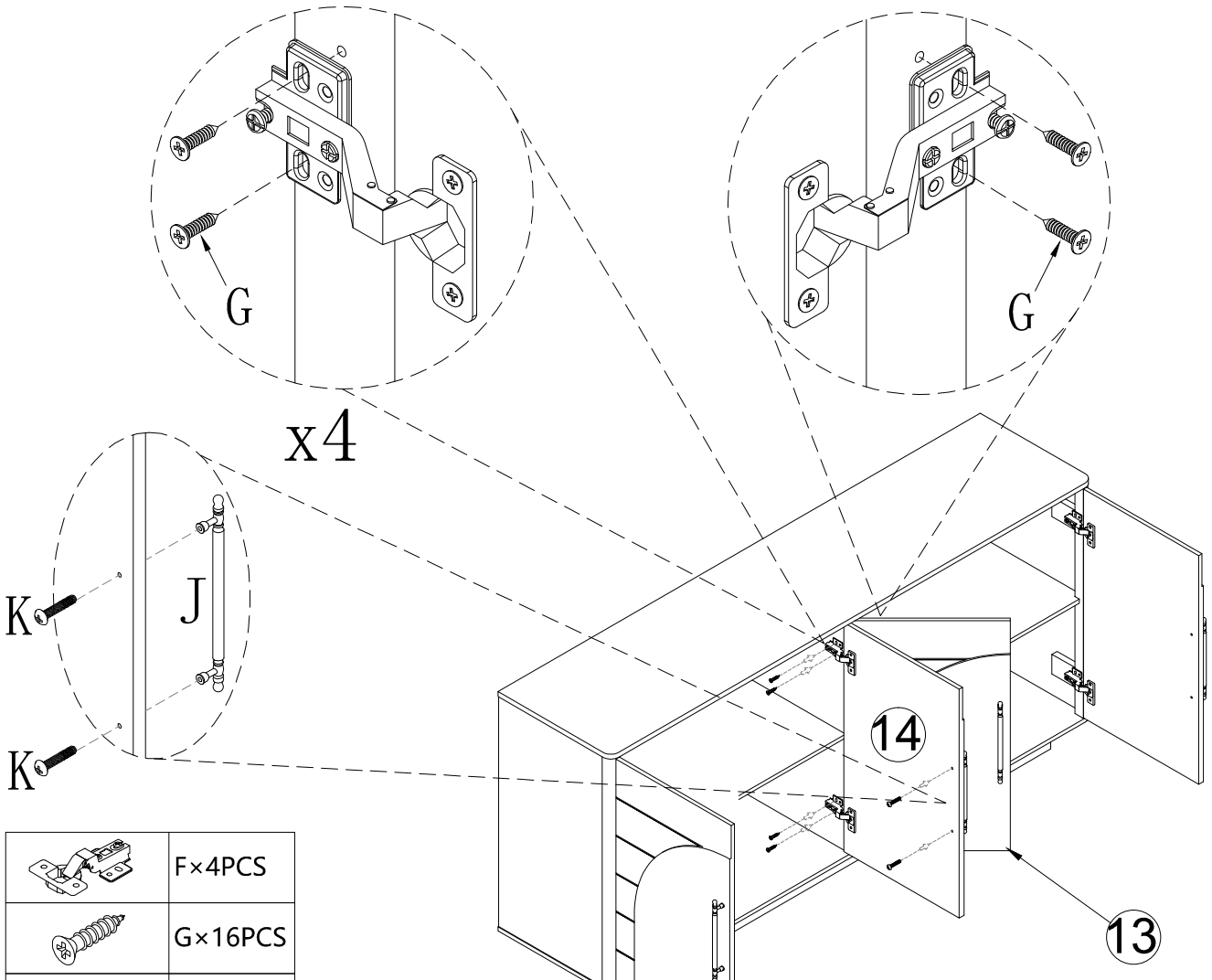


| | |
|---|---|
|  | F×4PCS |
|  | G×16PCS |
| 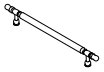 | J×2PCS |
|  | K×4PCS |

Attach the remaining door panels to the cabinet using hinges F.

# STEP 18

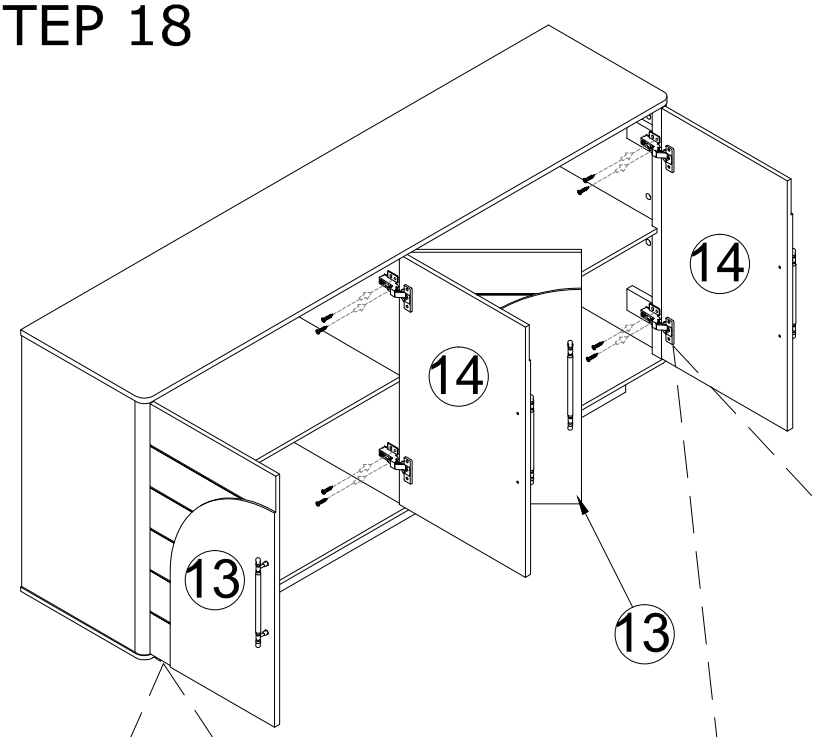


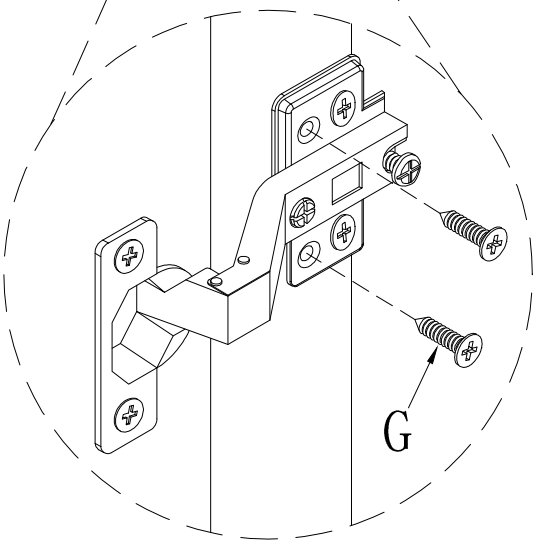


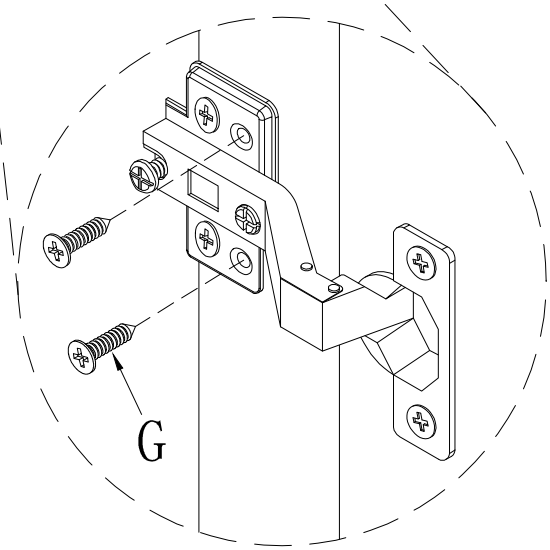


x8

| | |
|---|---|
| ⚠ | Tighten the screws once the doors are properly aligned. After all doors are in place, tighten the two front screws on each hinge. |

NOTE:
If the door gap is too large after installation, refer to pages 17 – 20 for the installation video and door adjustment tutorial.

| | |
|---|---|
|  | G×16PCS |

# STEP 19

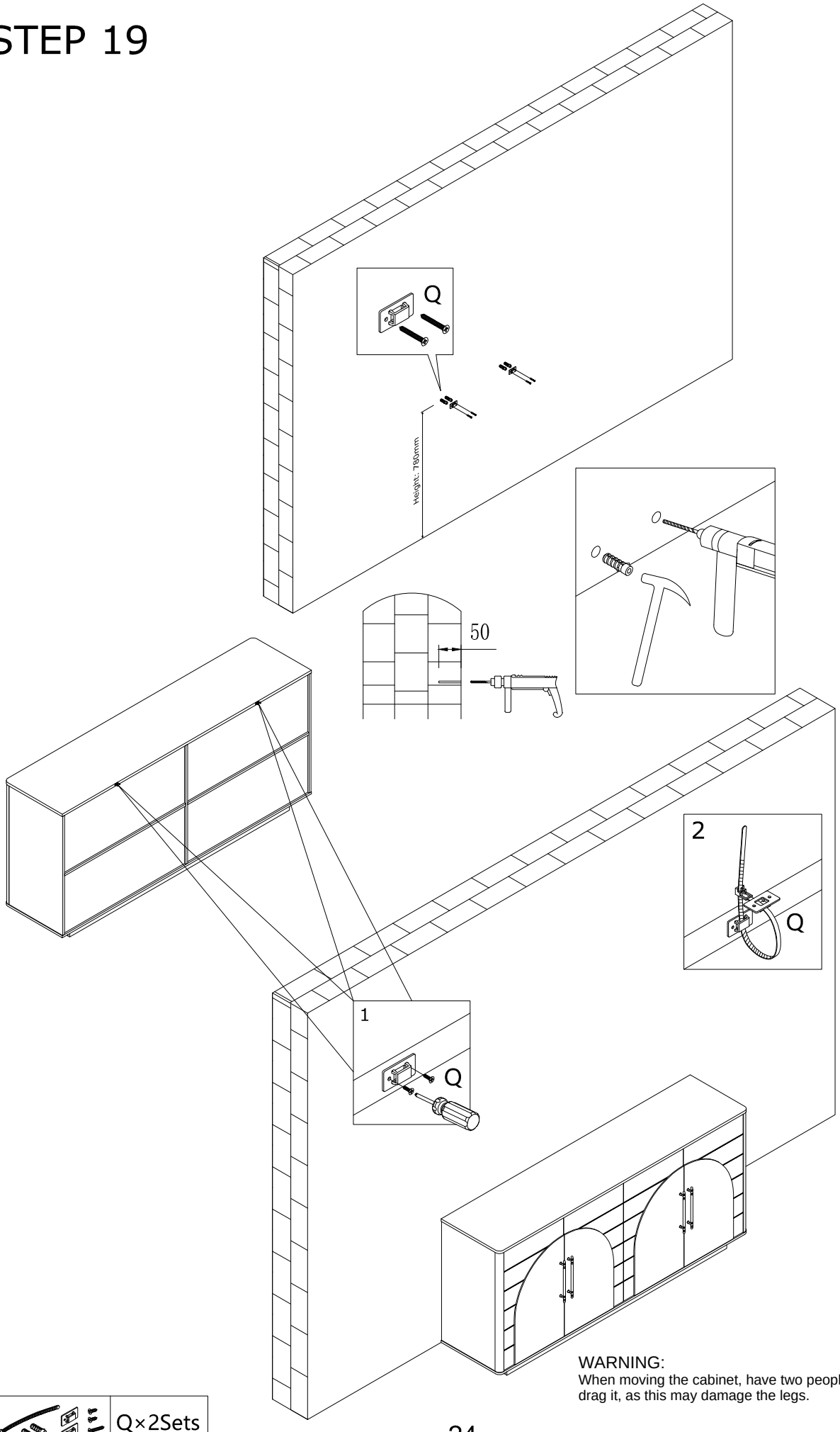


WARNING:
When moving the cabinet, have two people lift it. Do not drag it, as this may damage the legs.