ASSEMBLY INSTRUCTION

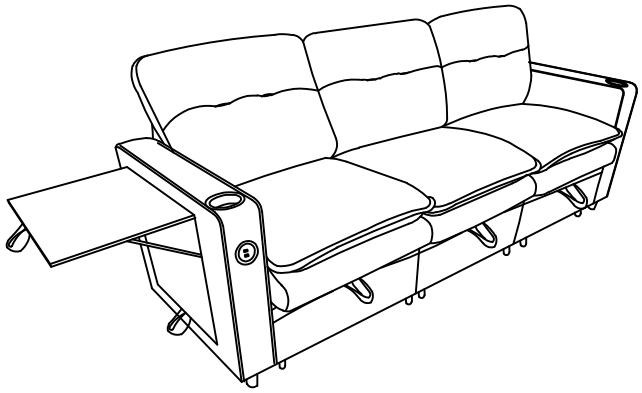

PARTS LIST

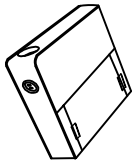 P1*1	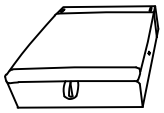 P2*1	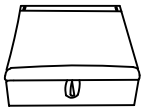 P3*1	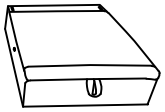 P4*1	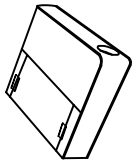 P5*1	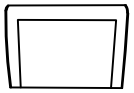 P6*3
 P7*3	 P8*3	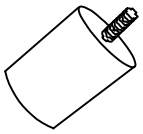 P9*16	 P10*6	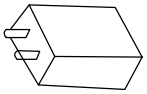 P11*1	

STEP 1

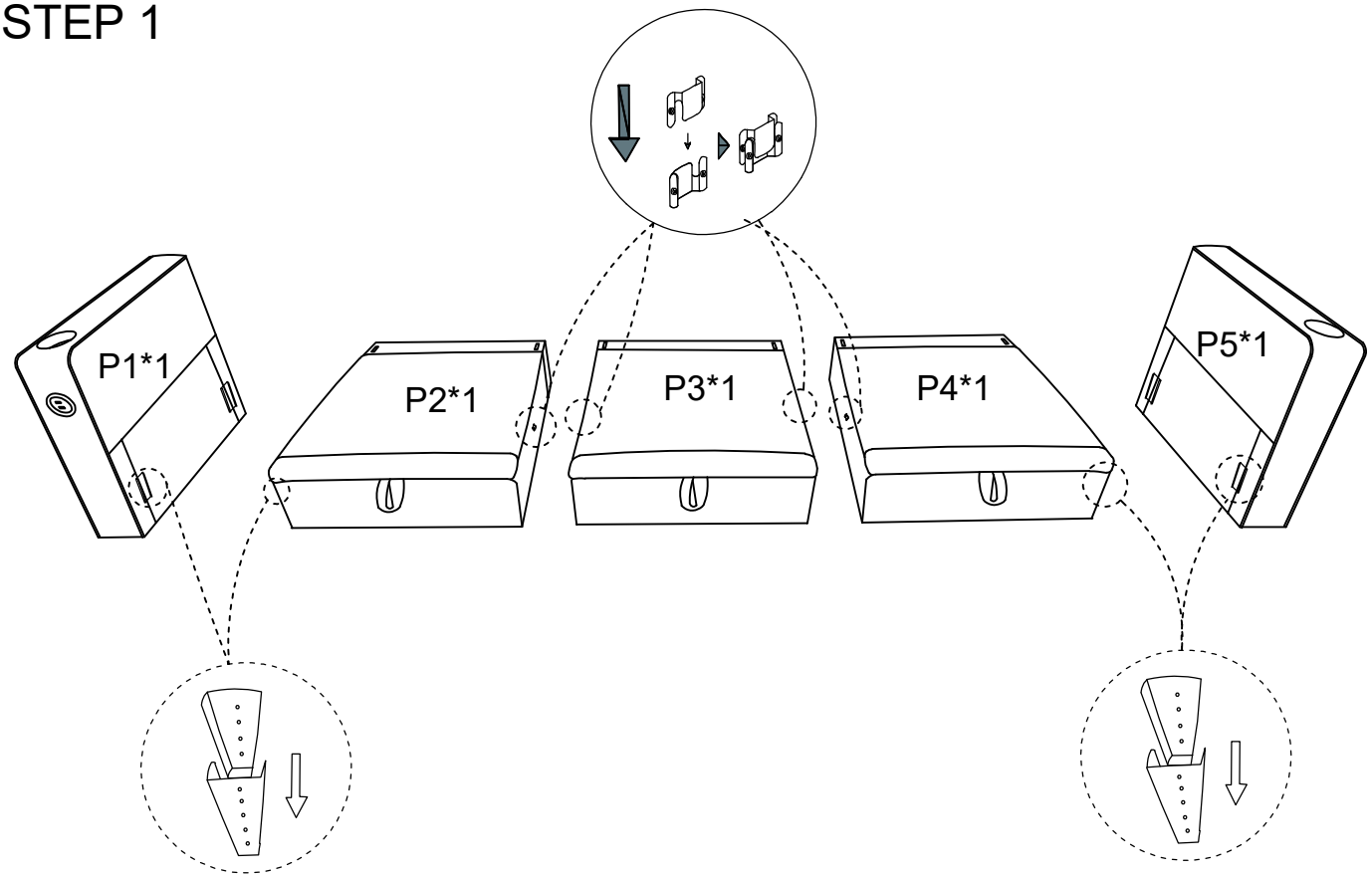

STEP 2

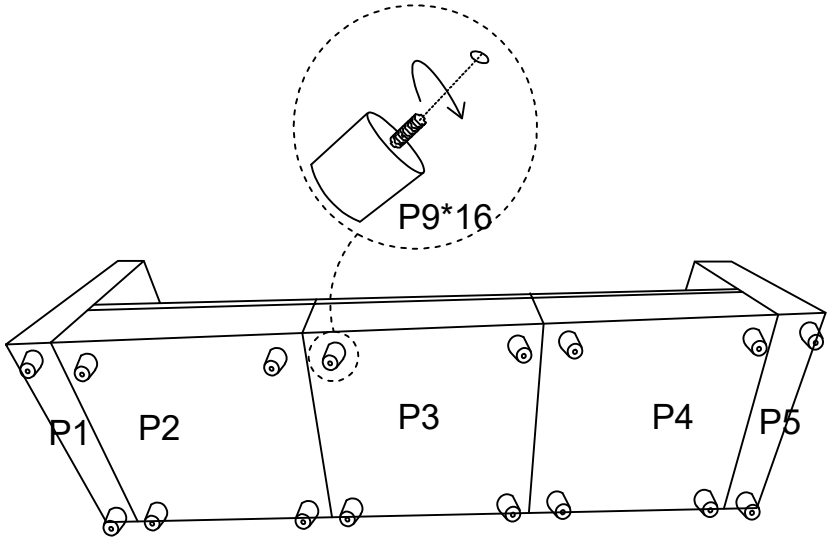

STEP 3

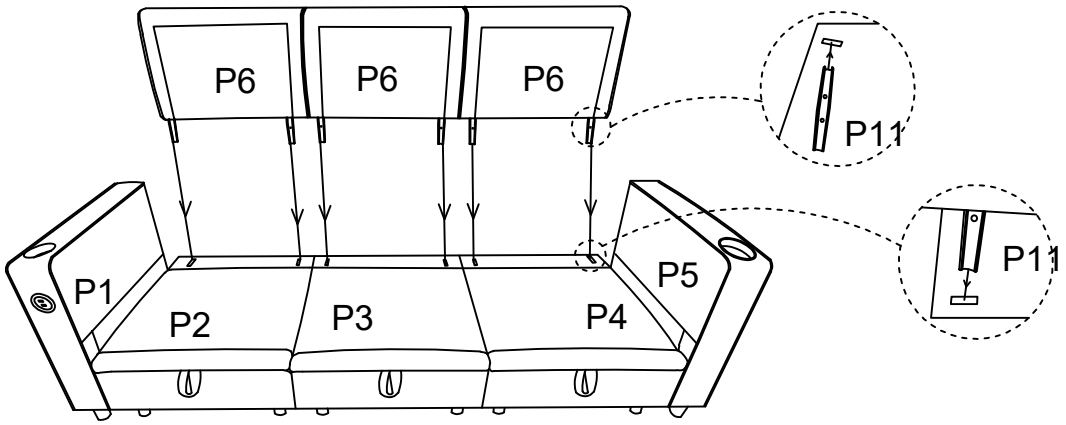

STEP 4

Place p7 and p8 in turn.

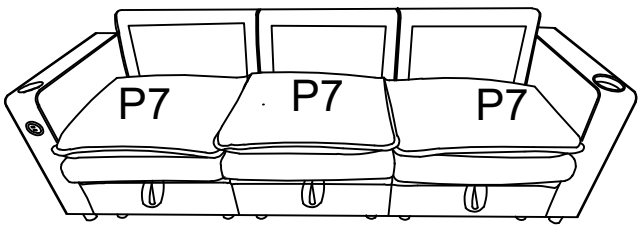

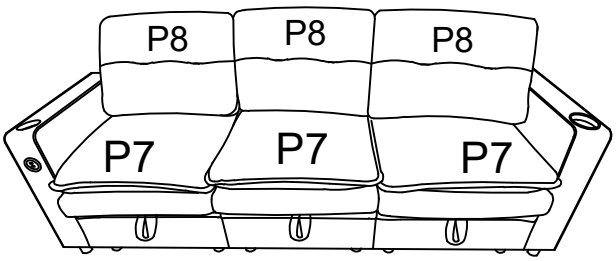

STEP 5

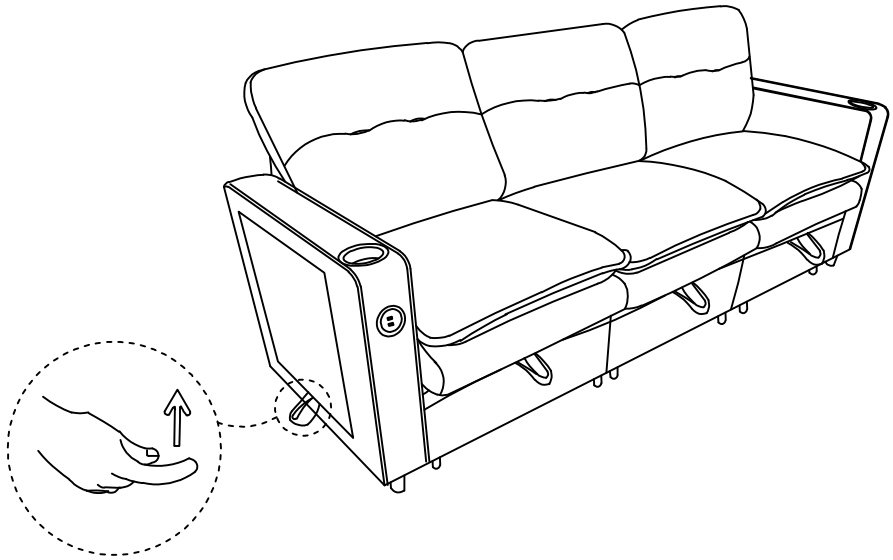

STEP 6

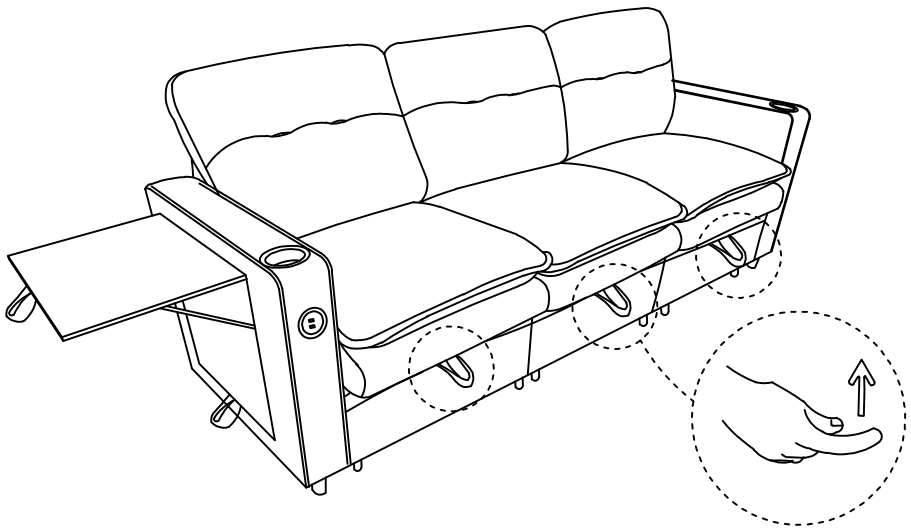

STEP 7

