Assembly Method | INSTRUCTION MANUAL

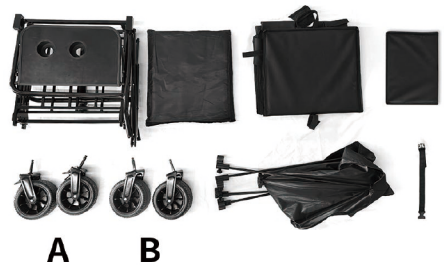

Check All Parts

Frame x1
Cushion x1
Fabric Cover x1
Cooler Bag x1
Wheel A x2
Wheel B x2
Sunshade x1
Storage Strap x1

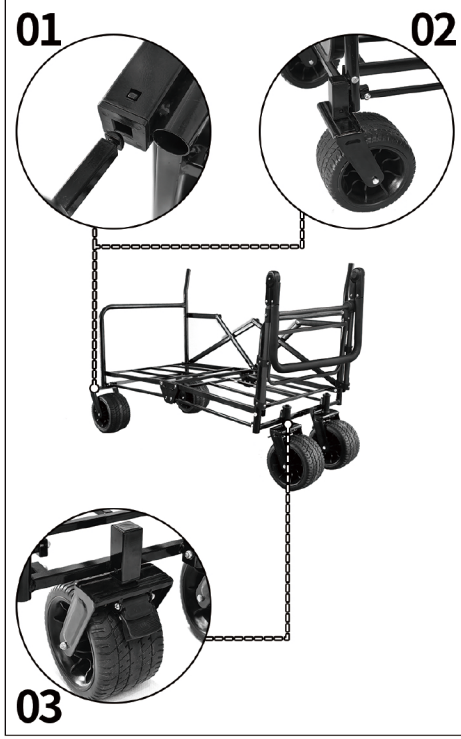

1. Unfold the frame and insert Wheel B into the matching holes.
2. Install Wheel B in the direction shown.
3. Wheel A includes a brake. Attach Wheel A on the handle side.



1. Attach the fabric cover. Fasten the hook-and-loop tape on the bottom to the matching positions.
2. Fit the fabric cover over the frame.
3. Secure the hook-and-loop tape at the matching positions.
4. Fasten the remaining hook-and-loop tape to the corresponding positions.
NOTE: Make sure all tape is firmly attached and the cover is installed correctly.



1. Open the zipper and place the cushion inside.
2. Install the sunshade. Tighten the screw knobs, then rotate the support poles inward to secure it.
3. Press both buttons at the same time and move the handle up or down to adjust the height.
4. Level the cooler-bag stand and firmly attach the cooler bag with the hook-and-loop tape.



STORAGE INSTRUCTIONS
1. Remove the sunshade.
2. Remove the cushion. The wagon cannot fold correctly with the cushion inside.
3. Press the buttons on both sides of the cooler-bag stand and close the stand. Then press both handle buttons at the same time and lower the handle.
4. Pull up the center strap on the seat and fold the frame.

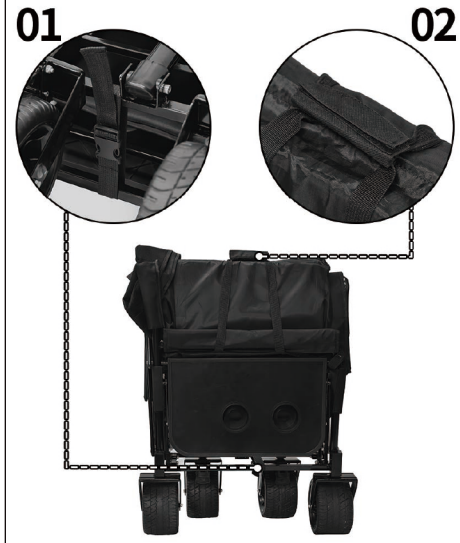

1. Use the storage strap to secure the two bottom crossbars, then pull the strap tight.
2. Firmly secure the handle with the hook-and-loop tape.