S018-1W

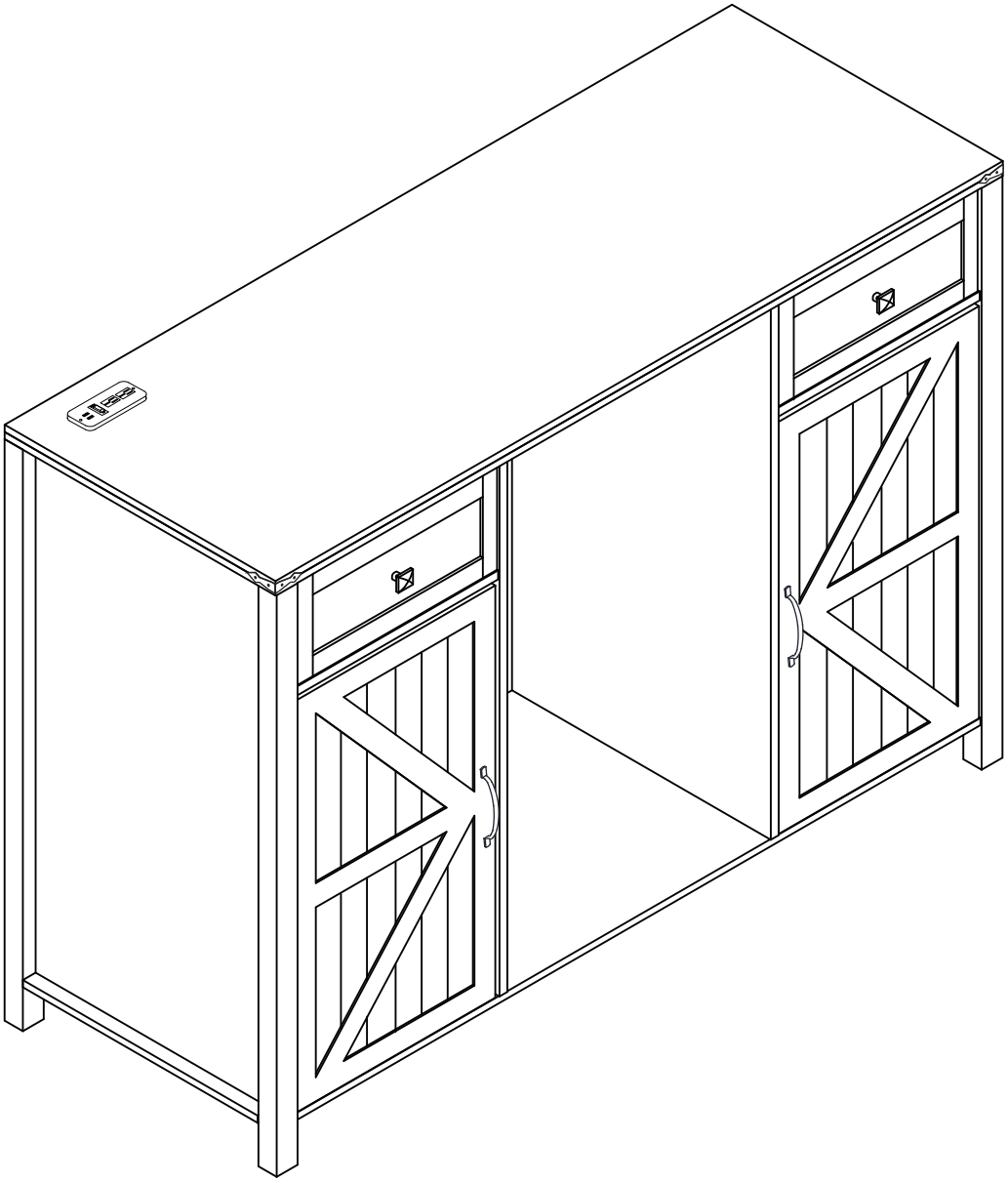

As this item contains many parts, please read the installation instruction carefully before installation . Please use tools properly and carefully.

Before You Start

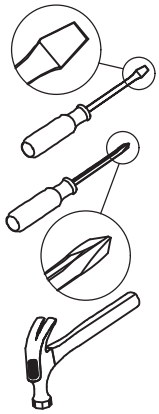

- Read through each step carefully and follow the proper order
- Separate and count all your parts and hardware
- Give yourself enough room for the assembly process
- Have the following tools: Flat Head Screwdriver, #2 Phillips Head Screwdriver and Hammer
- Caution: If using a power drill or power screwdriver for screwing, please be aware of to slow down and stop when screw is tight. Failure to do so may result in stripping the screw. （Assembly speed can be increased by using electric screwdriver）

Helpful Hints

PEOPLE NEEDED FOR ASSEMBLY: **1-2**

- Open your item in the area you plan to keep it to avoid excessive heavy lifting.



- Identify, sort and count the parts before attempting assembly.

- Make sure to always face the point on the top of the Cam Lock towards the outer edge.



- If there is a back panel in the package, please install it to make sure your unit is complete and sturdy.



-Please fix all the screws provided for the back panel which can enhance product stability. If it is difficult to fix it when tightening, it can be fixed with the help of a hammer and then tightened.



- Never push, pull, or drag your furniture.

Board Identification

Not actual size

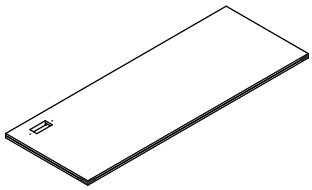

① Qty:1

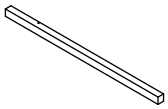

② Qty:1

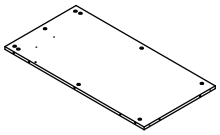

③ Qty:1

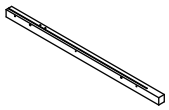

④ Qty:1



⑤ Qty:1

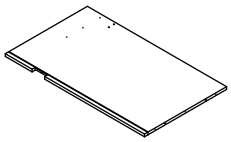

⑥ Qty:1

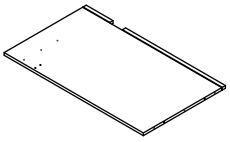

⑦ Qty:1

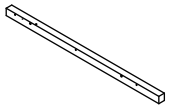

⑧ Qty:1

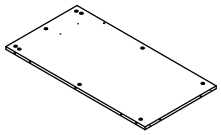

⑩ Qty:1

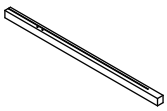

⑪ Qty:1

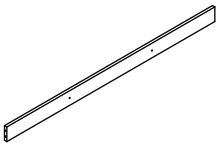

⑫ Qty:1

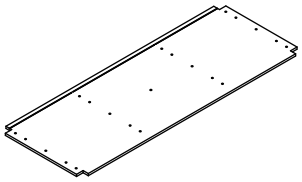

⑬ Qty:1

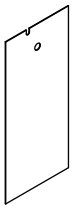

⑭ Qty:1

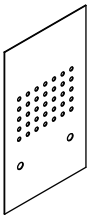

⑮ Qty:1

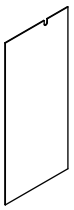

⑯ Qty:1



⑰ Qty:2



⑱ Qty:2



⑲ Qty:2

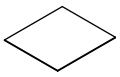

⑳ Qty:2



㉑ Qty:2

Board Identification

Not actual size



22

Qty:2



23

Qty:1



24

Qty:1



25

Qty:1

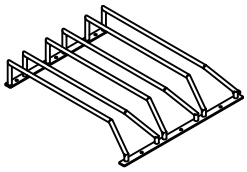

26

Qty:1

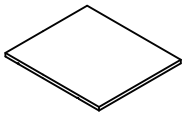

27

Qty:2



28

Qty:1

Board Identification

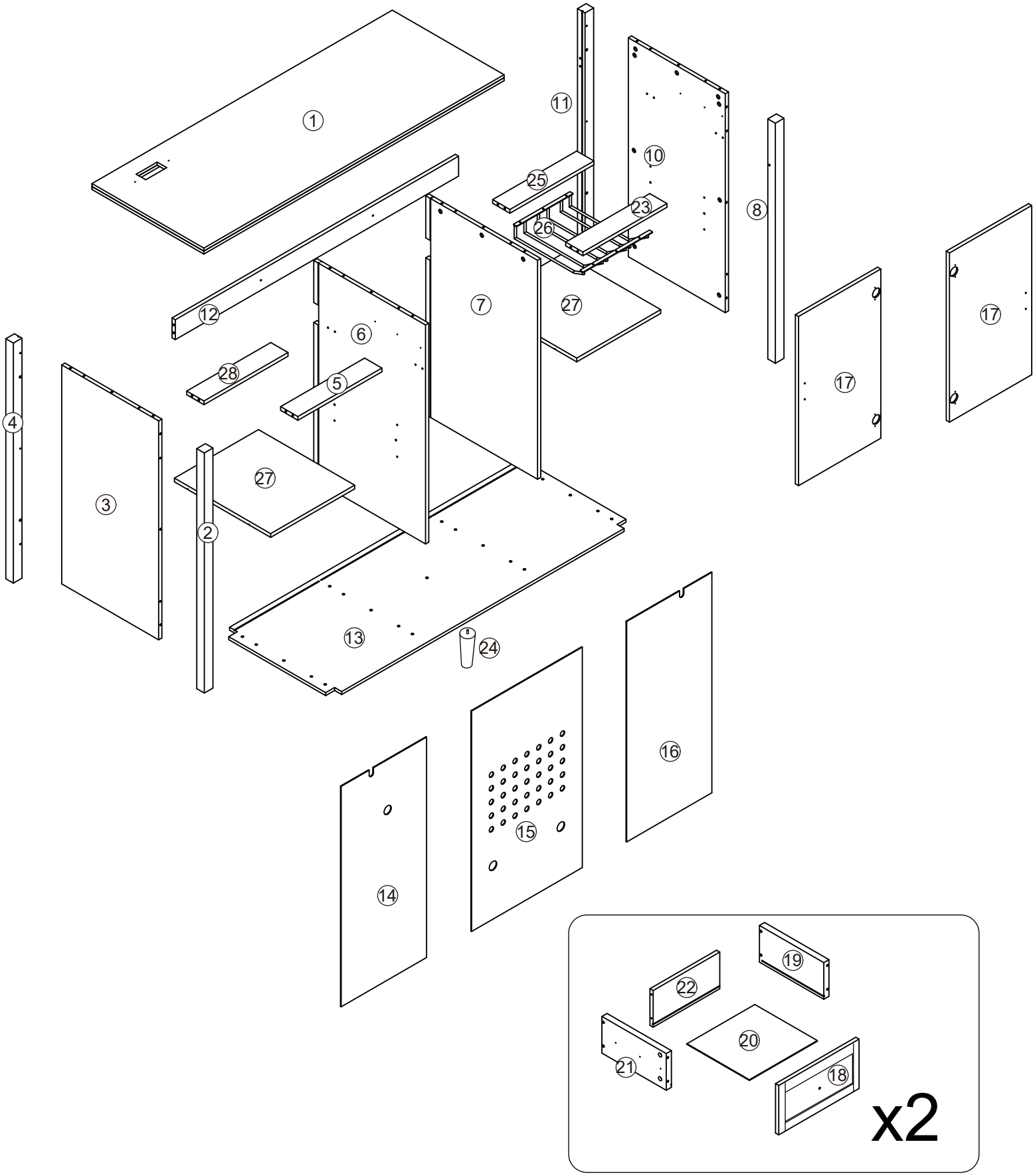

Part List



A	x52



B	x52

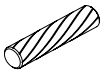

Ø8x30mm

C	x24



Ø3.5x10mm

D	x24

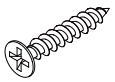

Ø4x35mm

E	x10



F	x12



Ø3.5x12mm WHITE

G	x24



H	x4

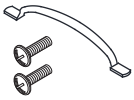

Ø4x18mm

I	x2



J	x2



K	x2



Ø4x15mm

L	x2



CL	x4

DL	x4

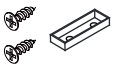

M	x2



N	x12



Ø3x16mm

O	x12



P	x1



Q	x8



Ø3.5x12mm BLACK

R	x2



S	x1



Ø4x12mm

T	x6

Cam Lock Fastening System

Insert the cam bolt into the hole first, then insert the cam lock and lock it.

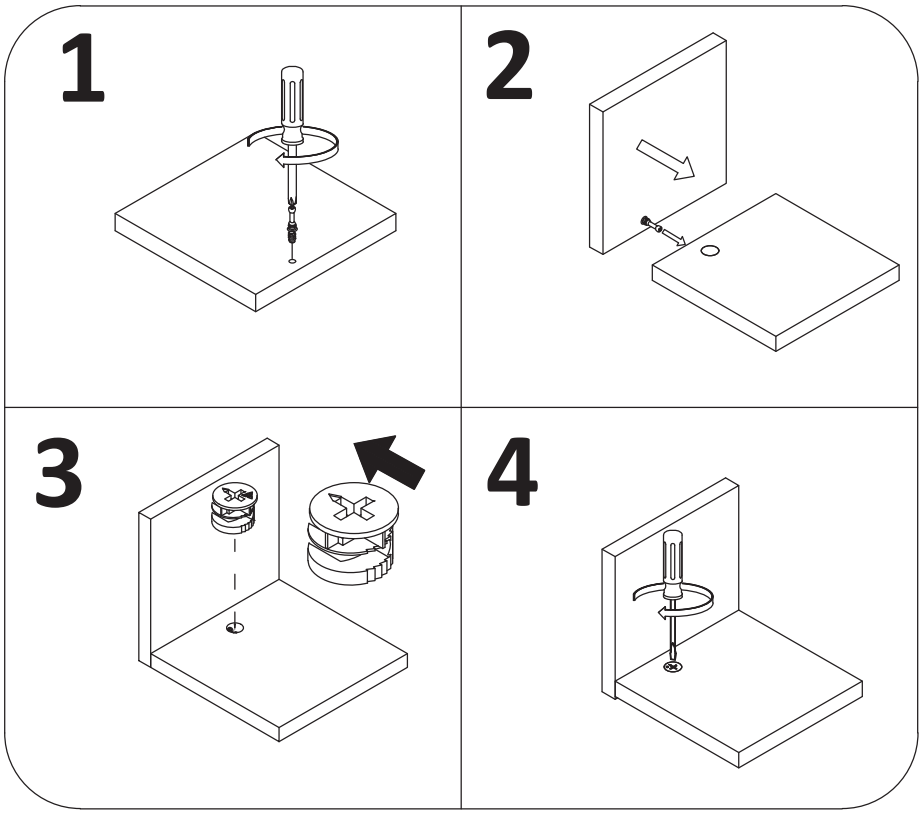

STEP 1

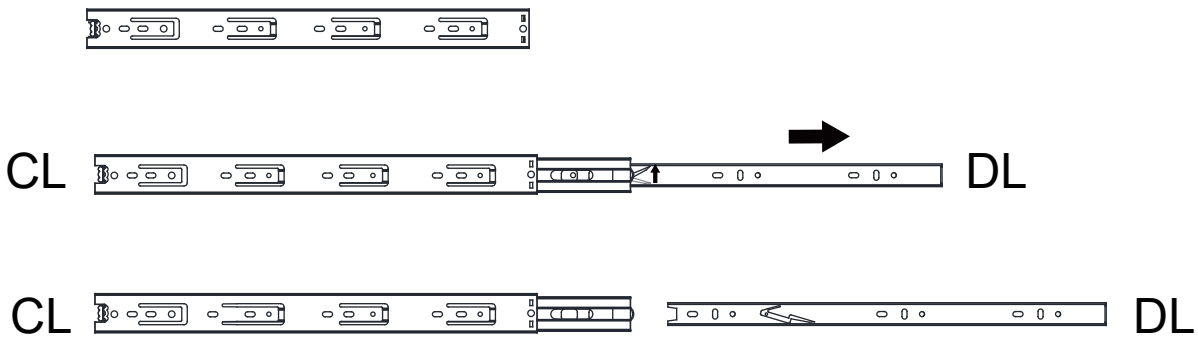

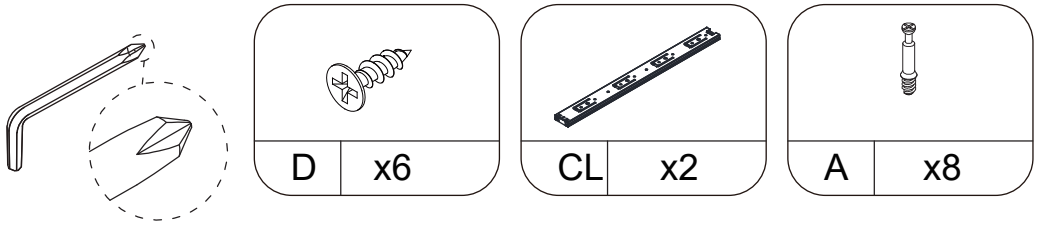



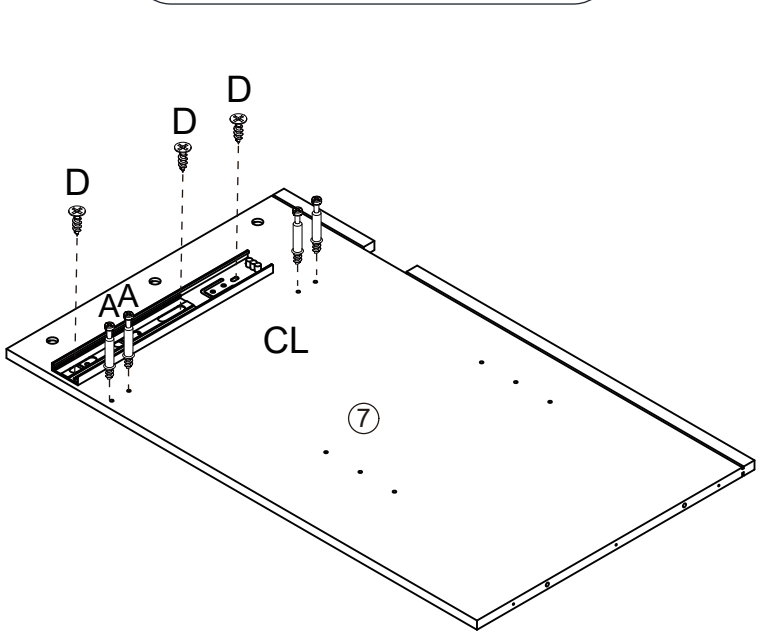

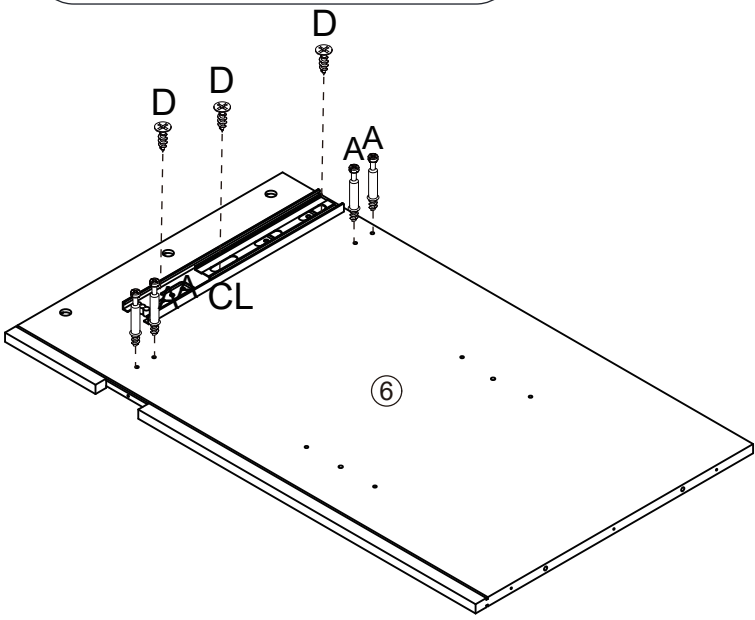

STEP 2

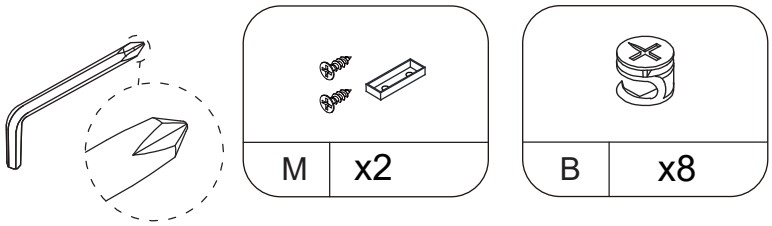

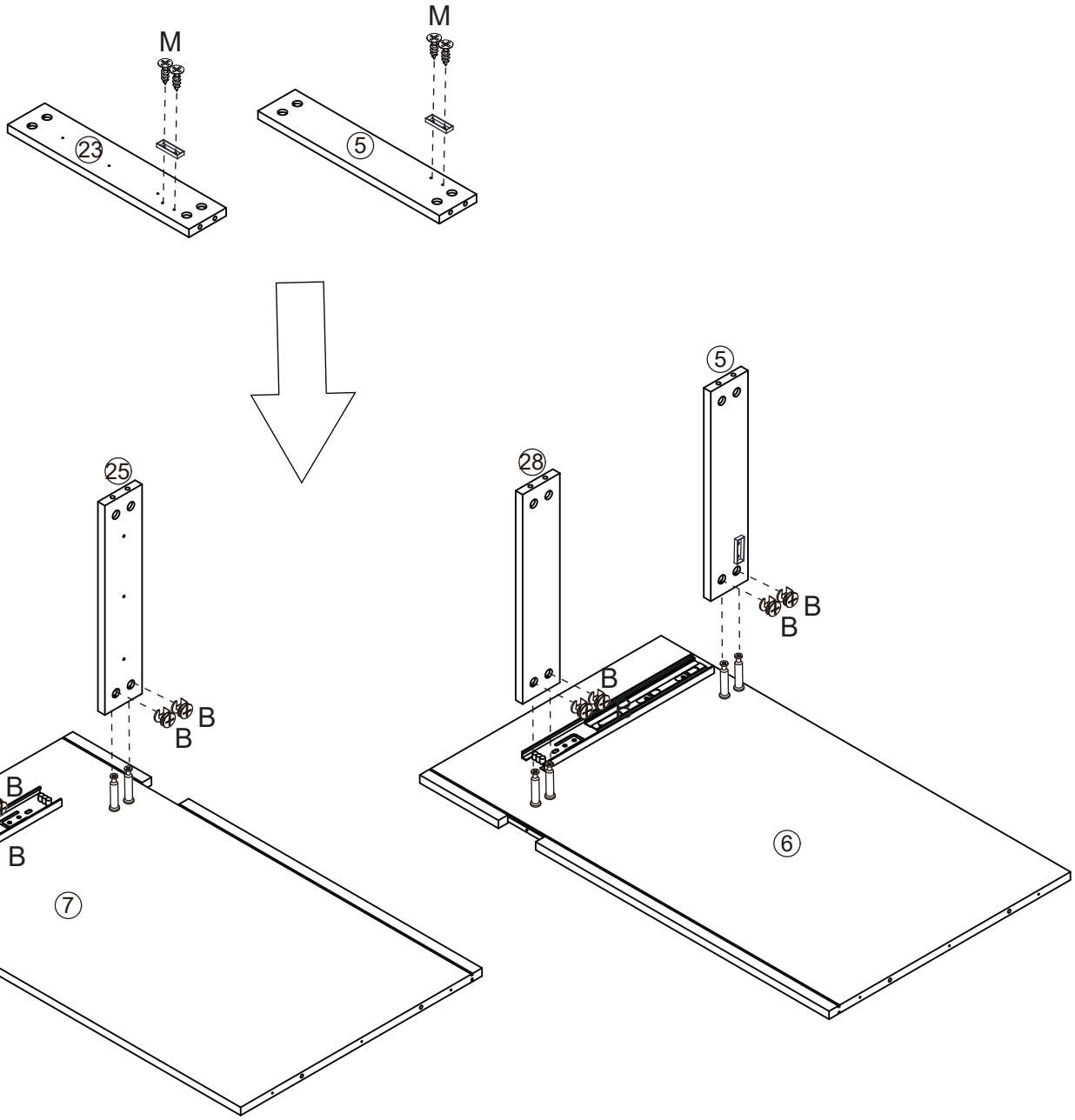

STEP 3

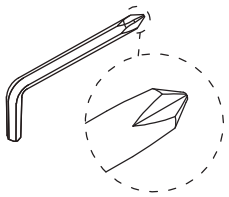

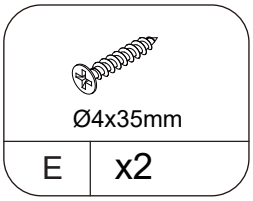

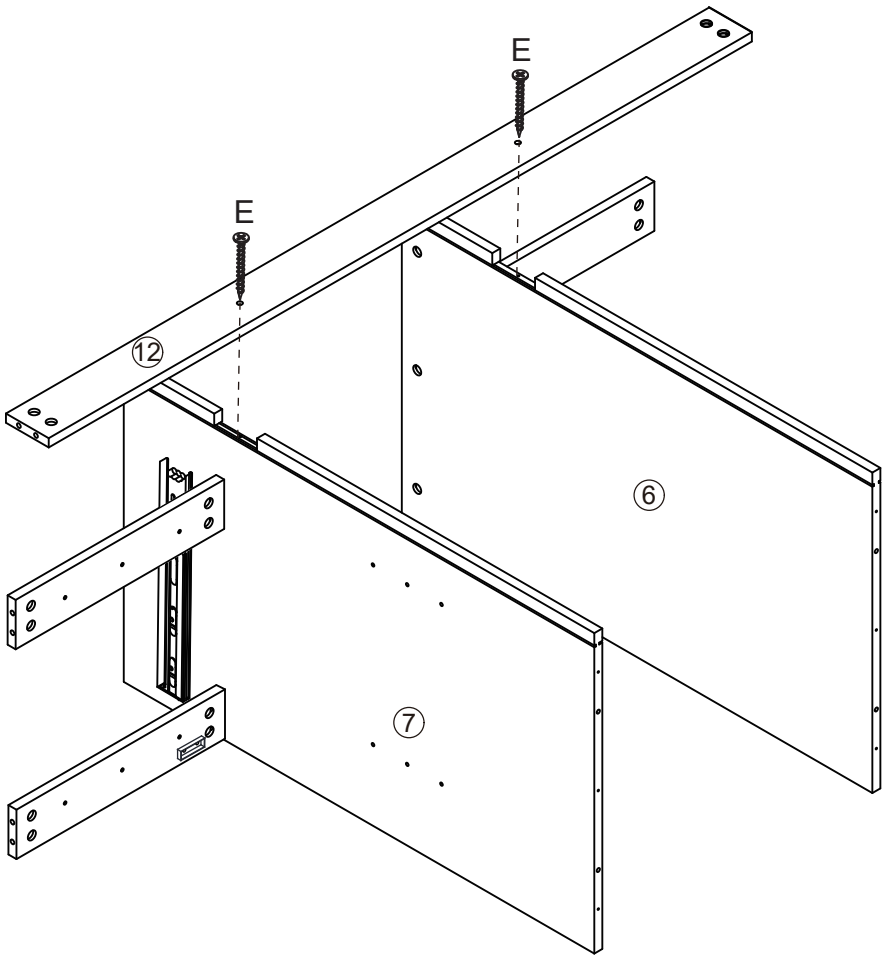

STEP 4

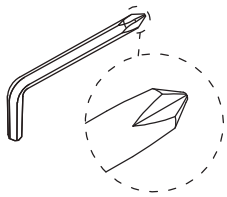

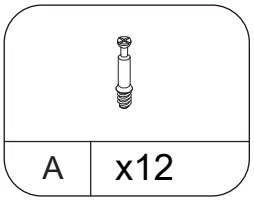

A	x12

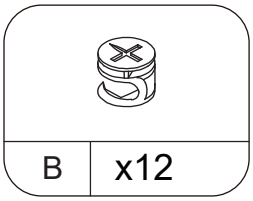

B	x12

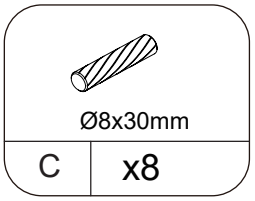

Ø8x30mm

C	x8

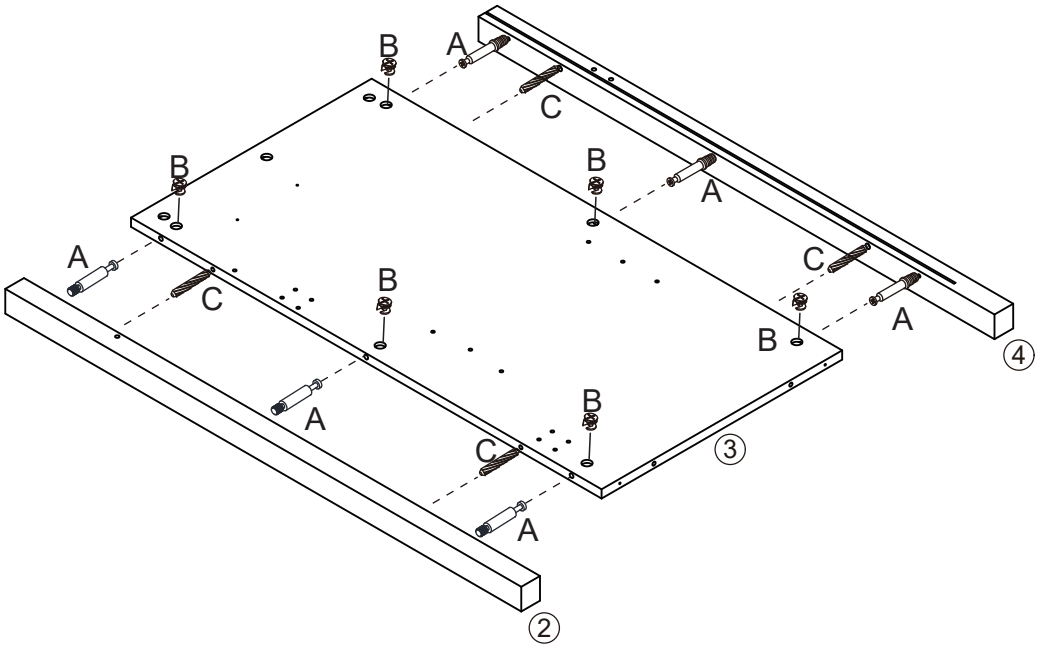

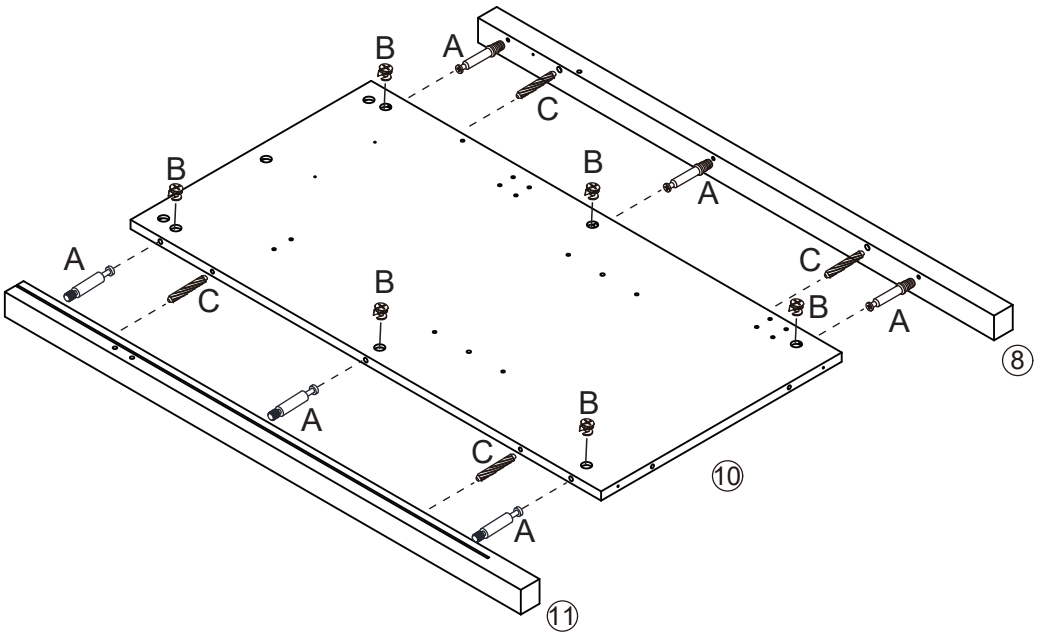

STEP 5



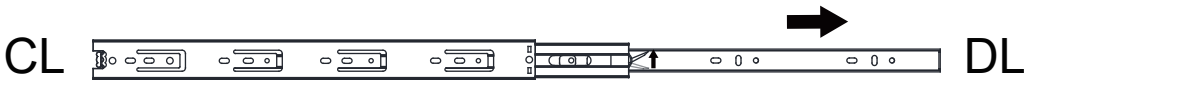

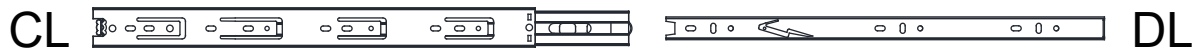

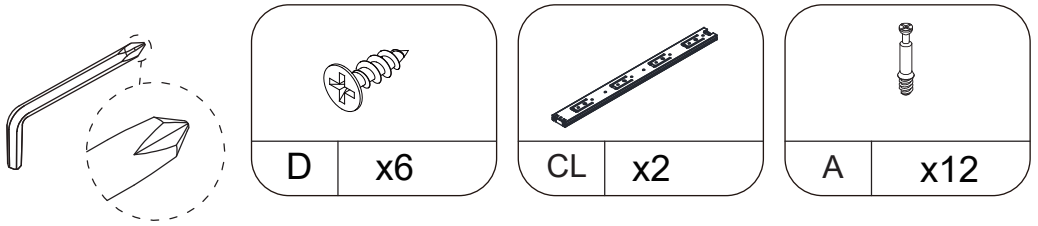



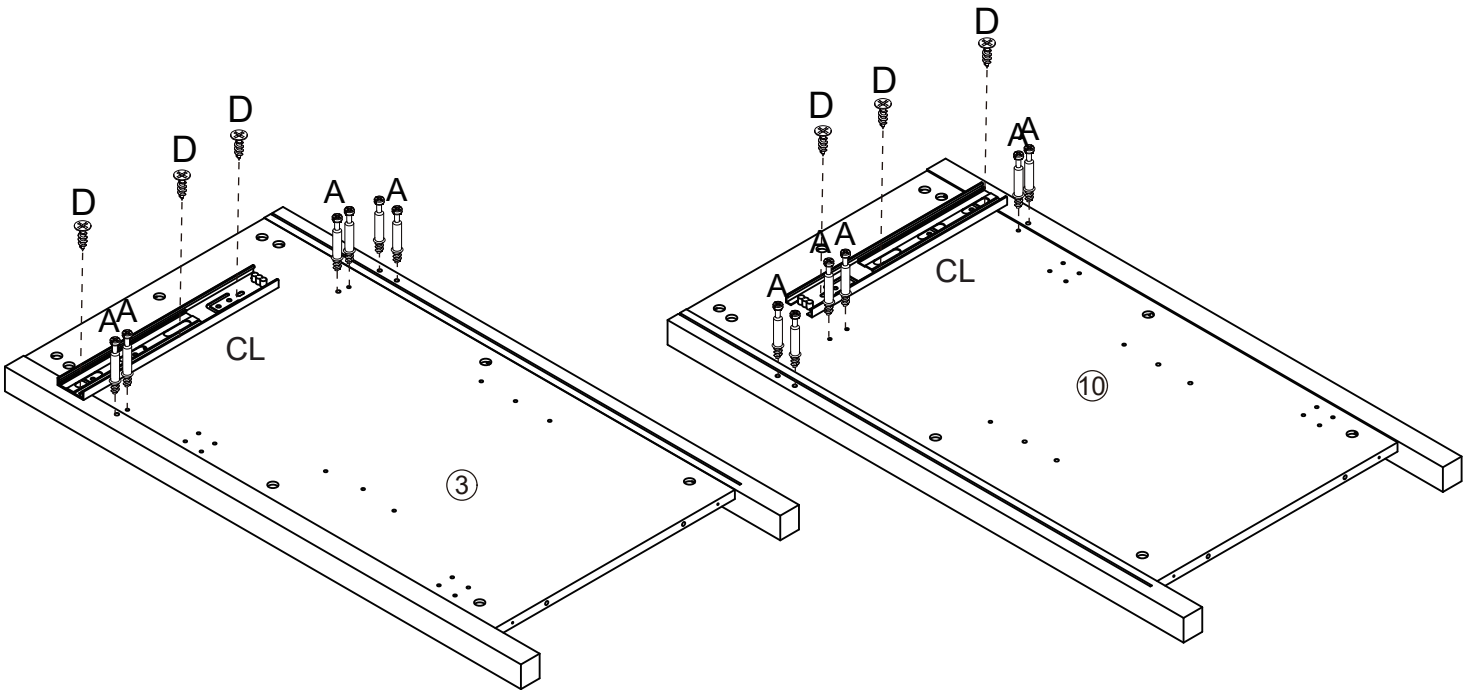

STEP 6

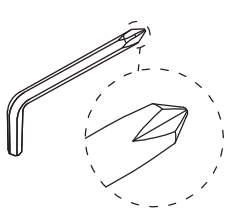

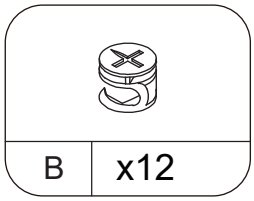

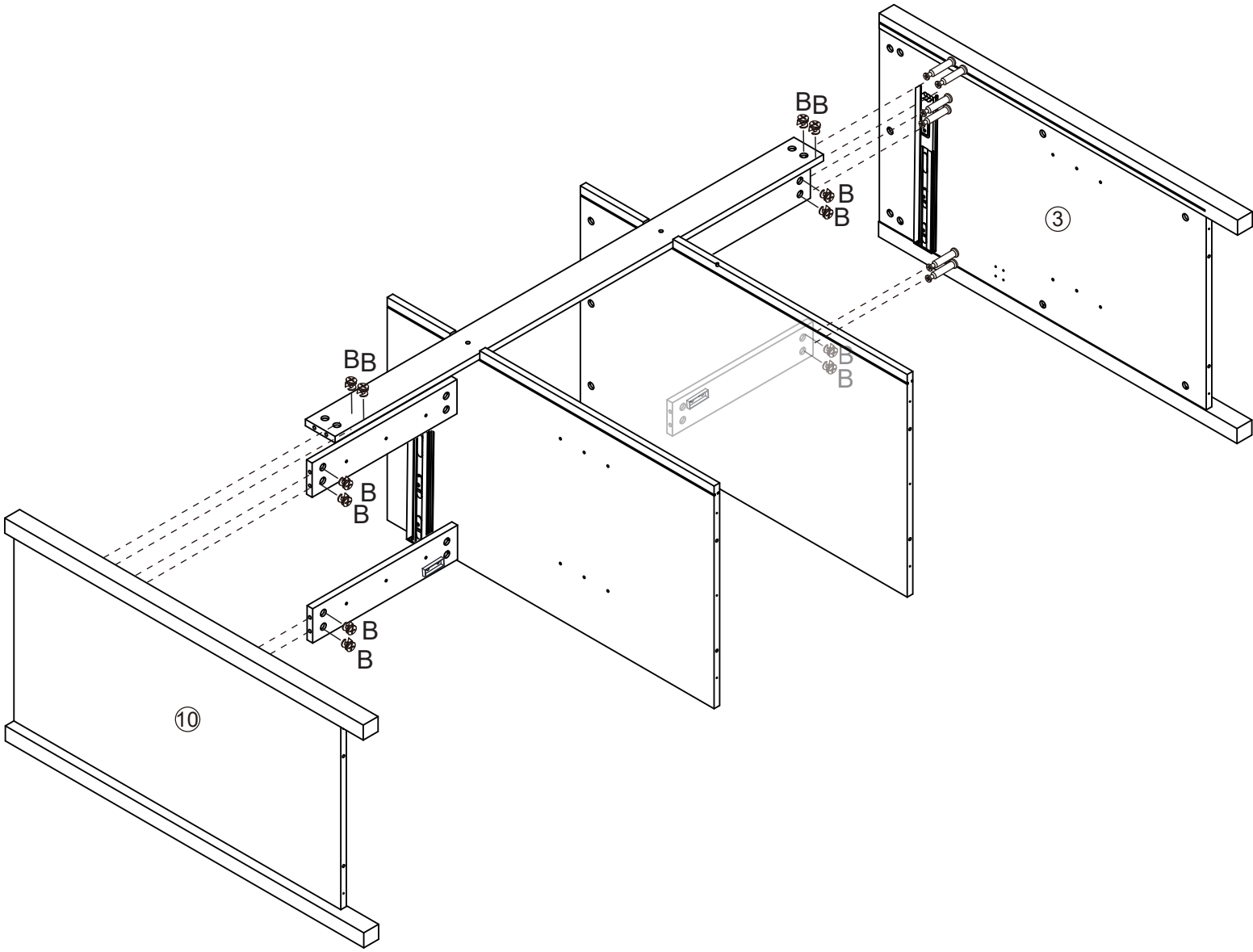

STEP 7

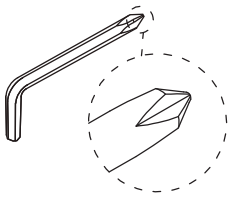

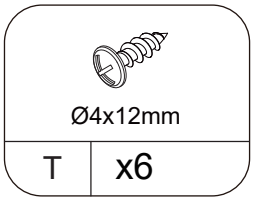

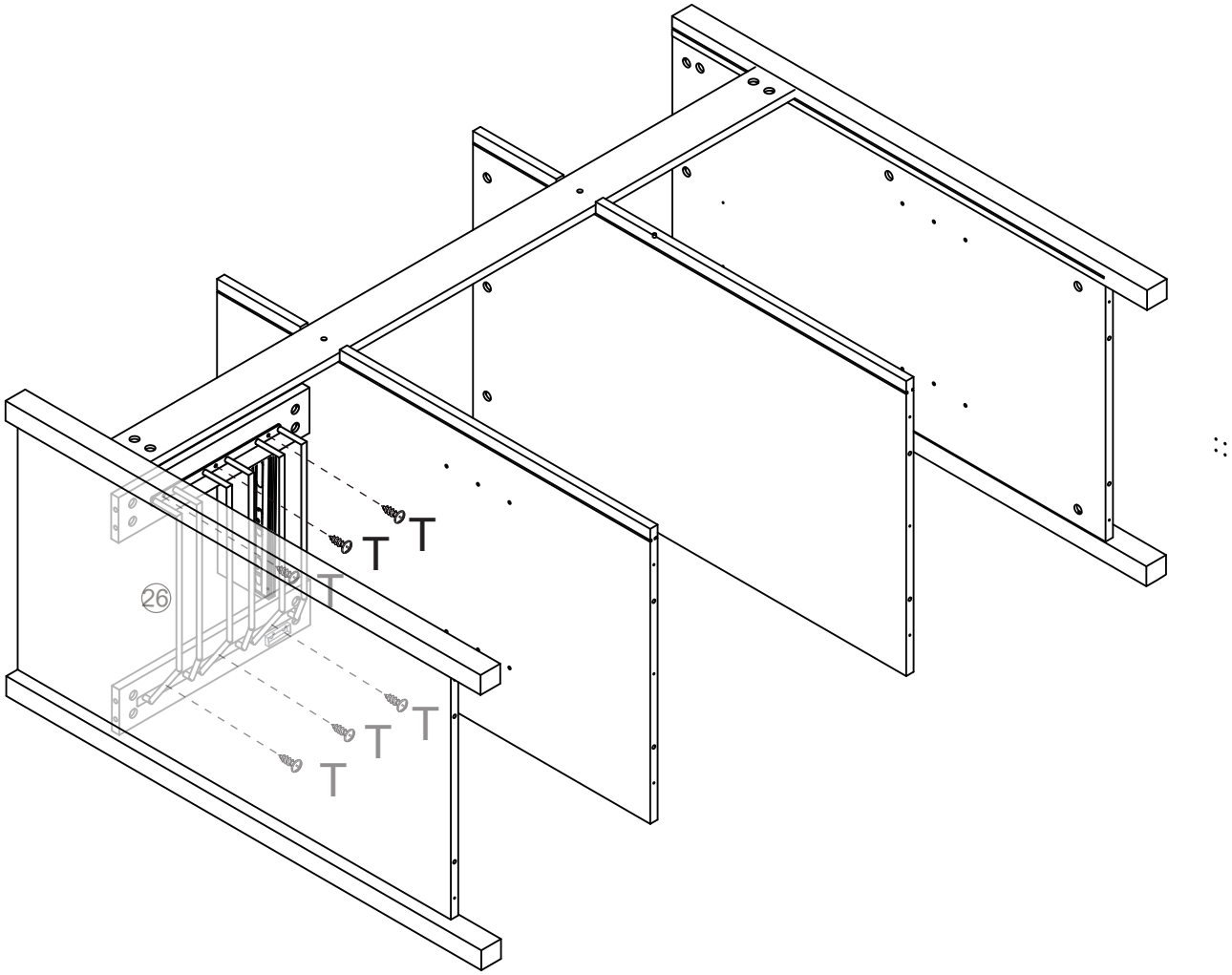

STEP 8

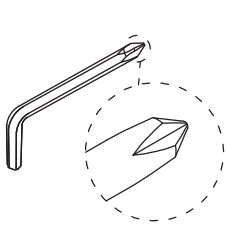

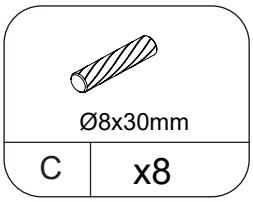

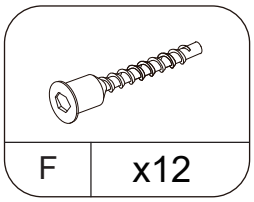

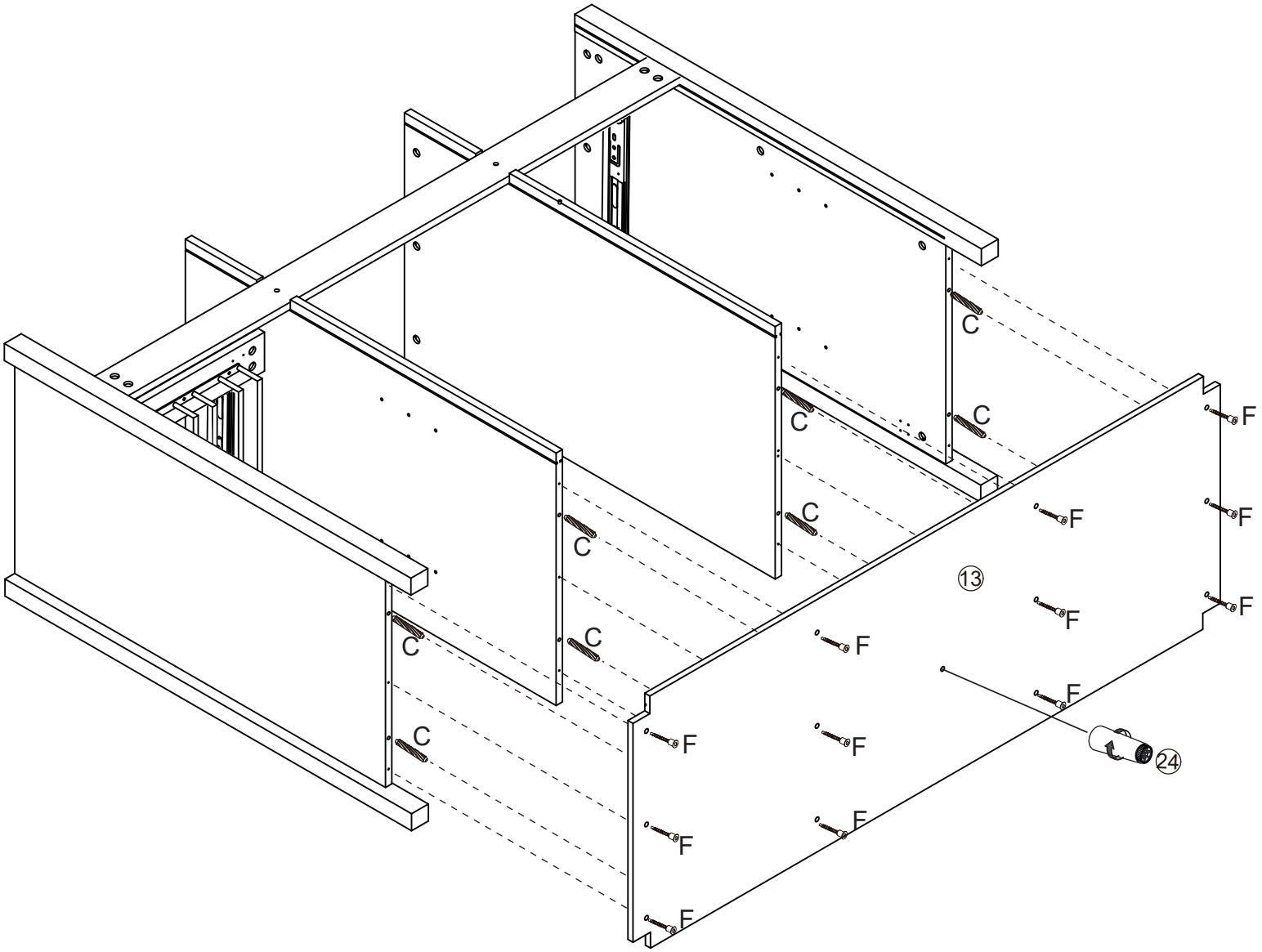

STEP 9

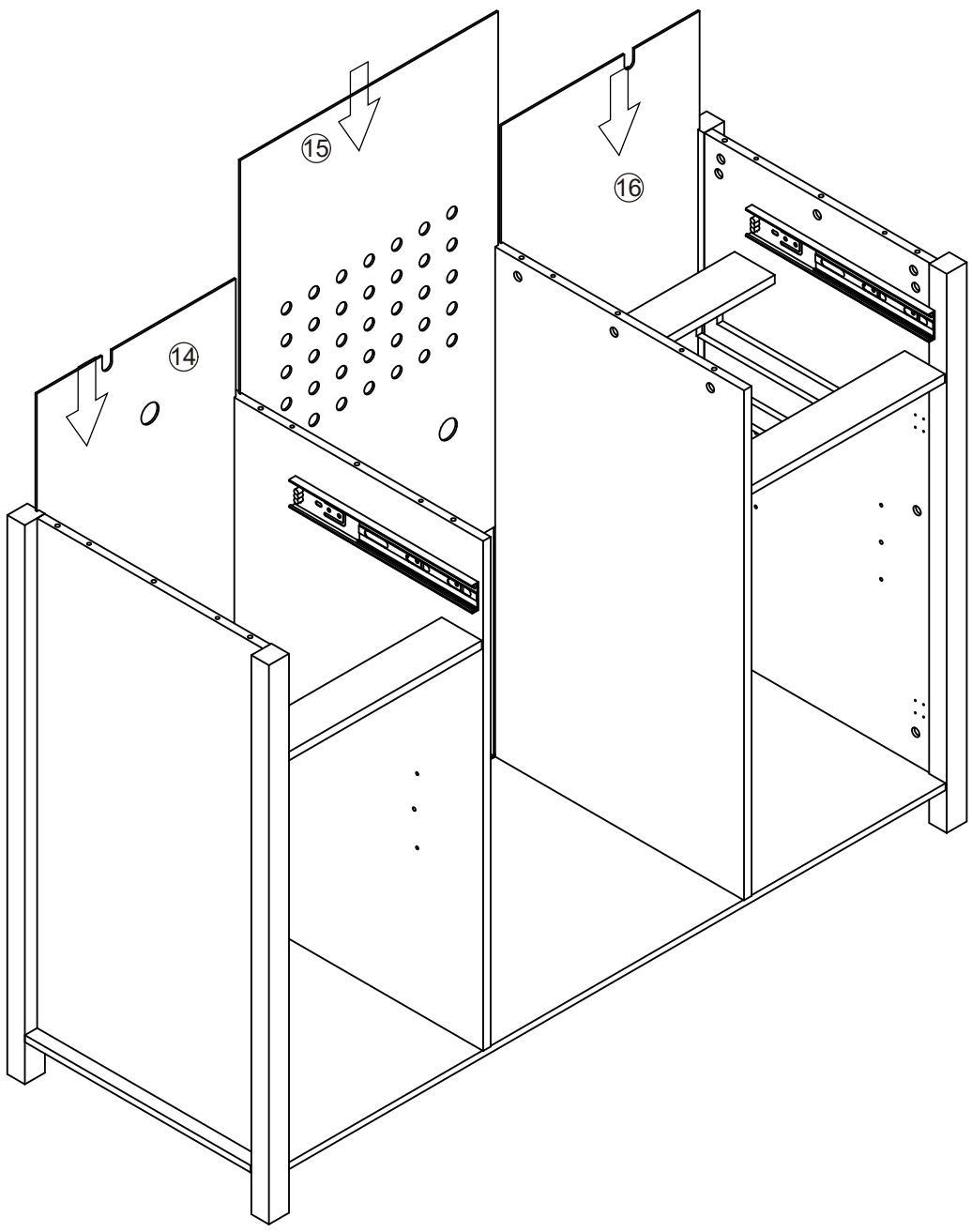

STEP 10

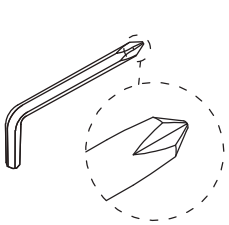

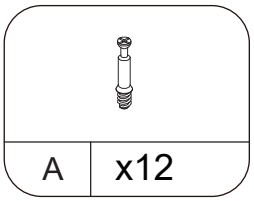

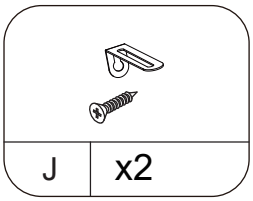

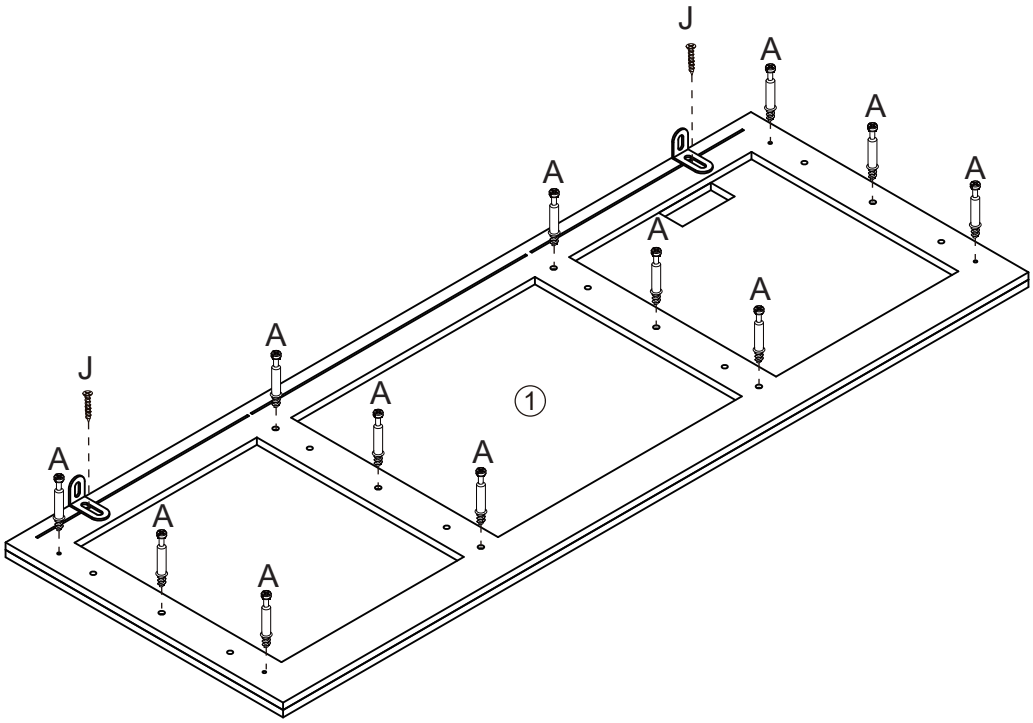

STEP 11

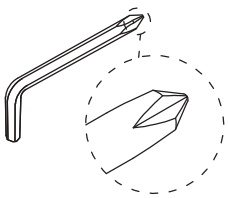

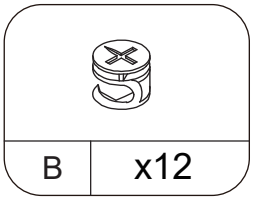

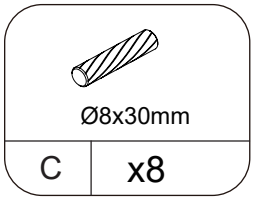

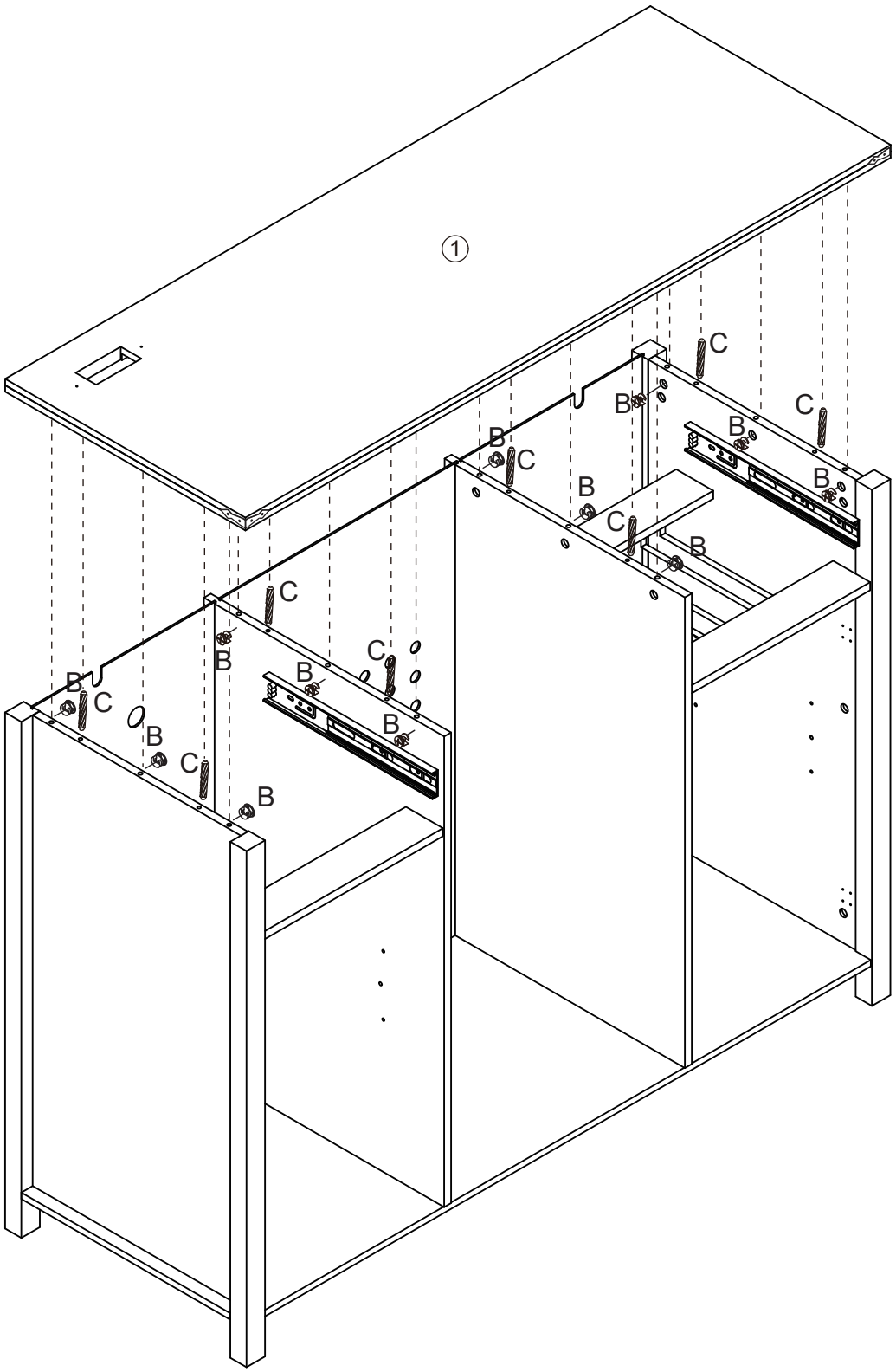

STEP 12

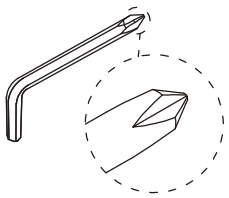

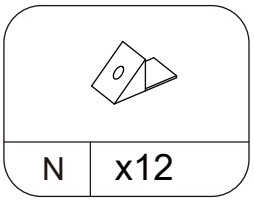

N	x12

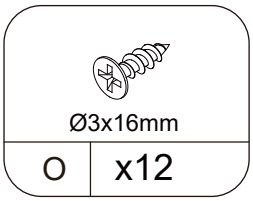

Ø3x16mm

O	x12

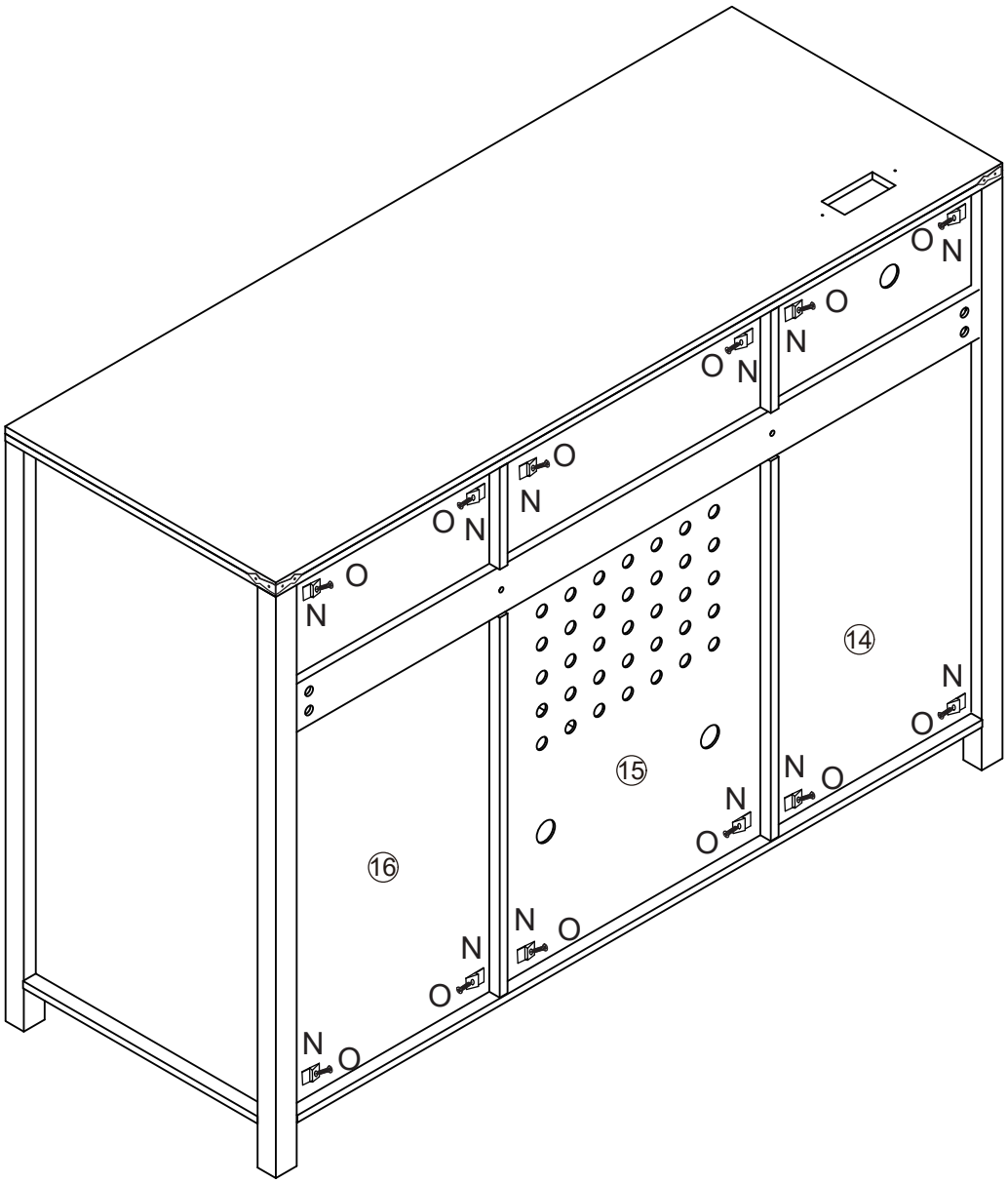

STEP 13

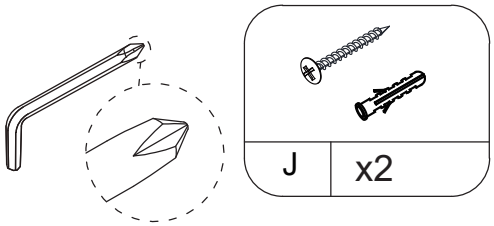

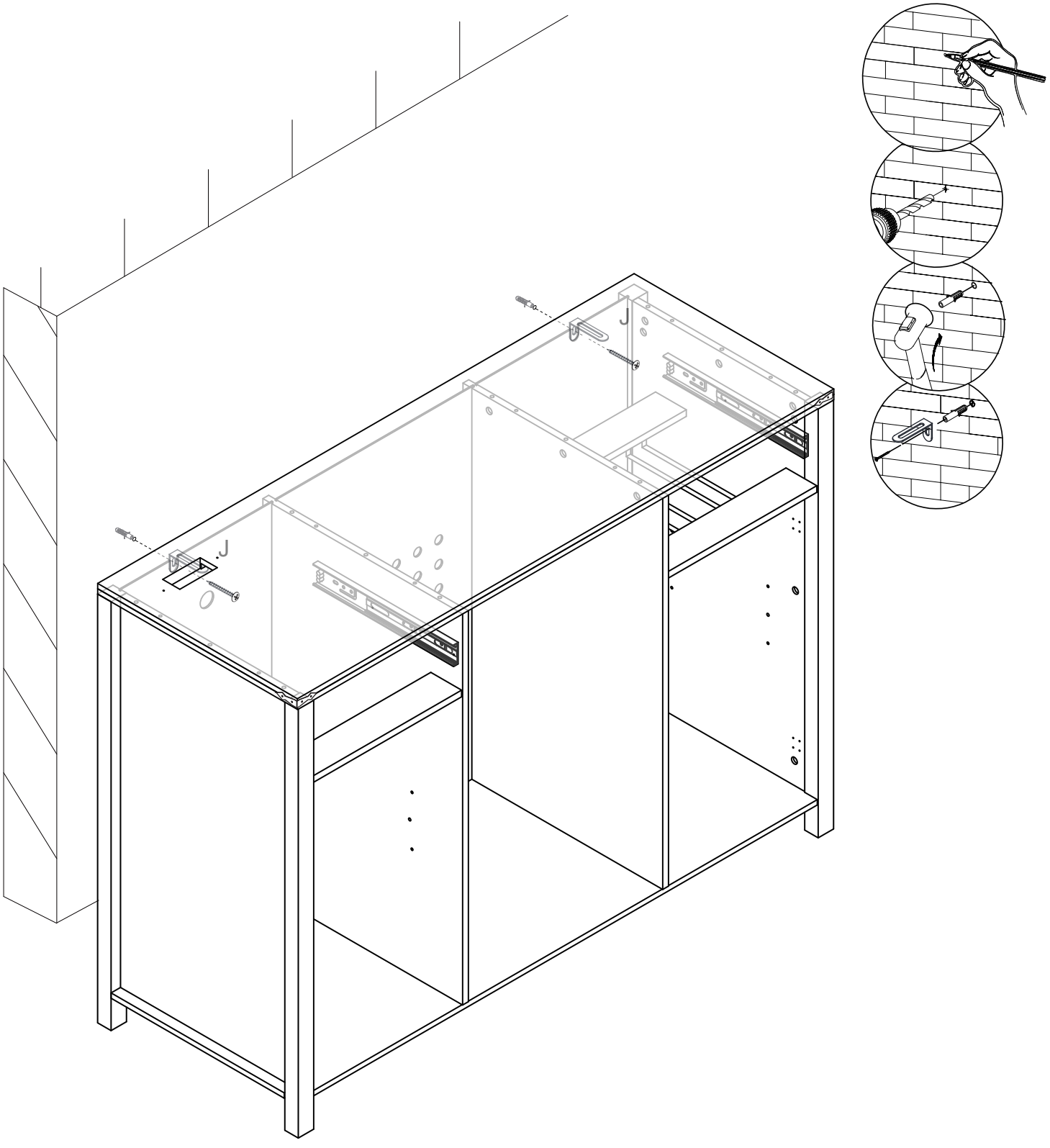

STEP 14

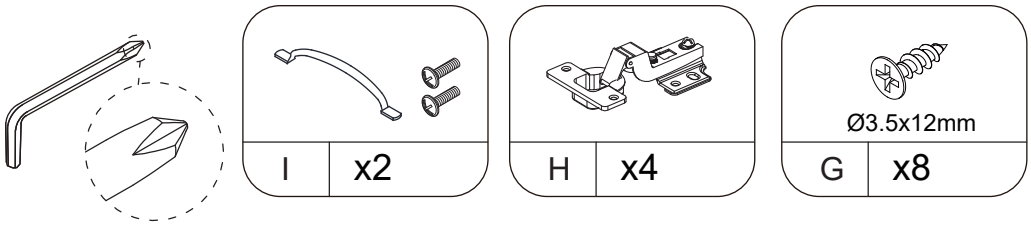

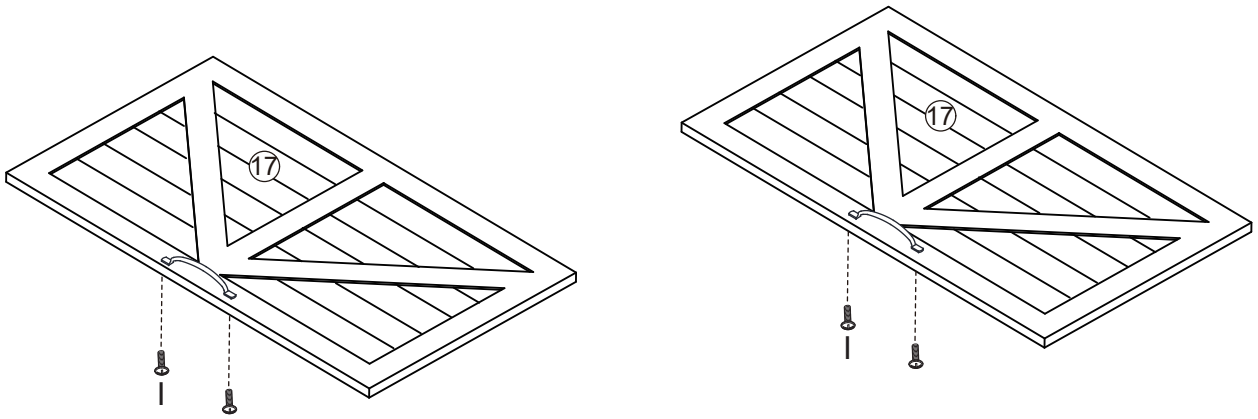

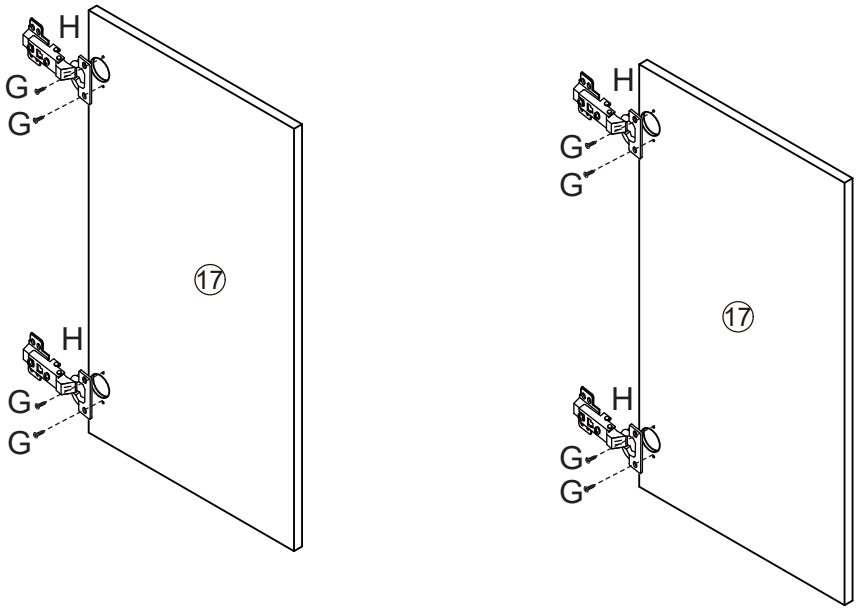

STEP 15

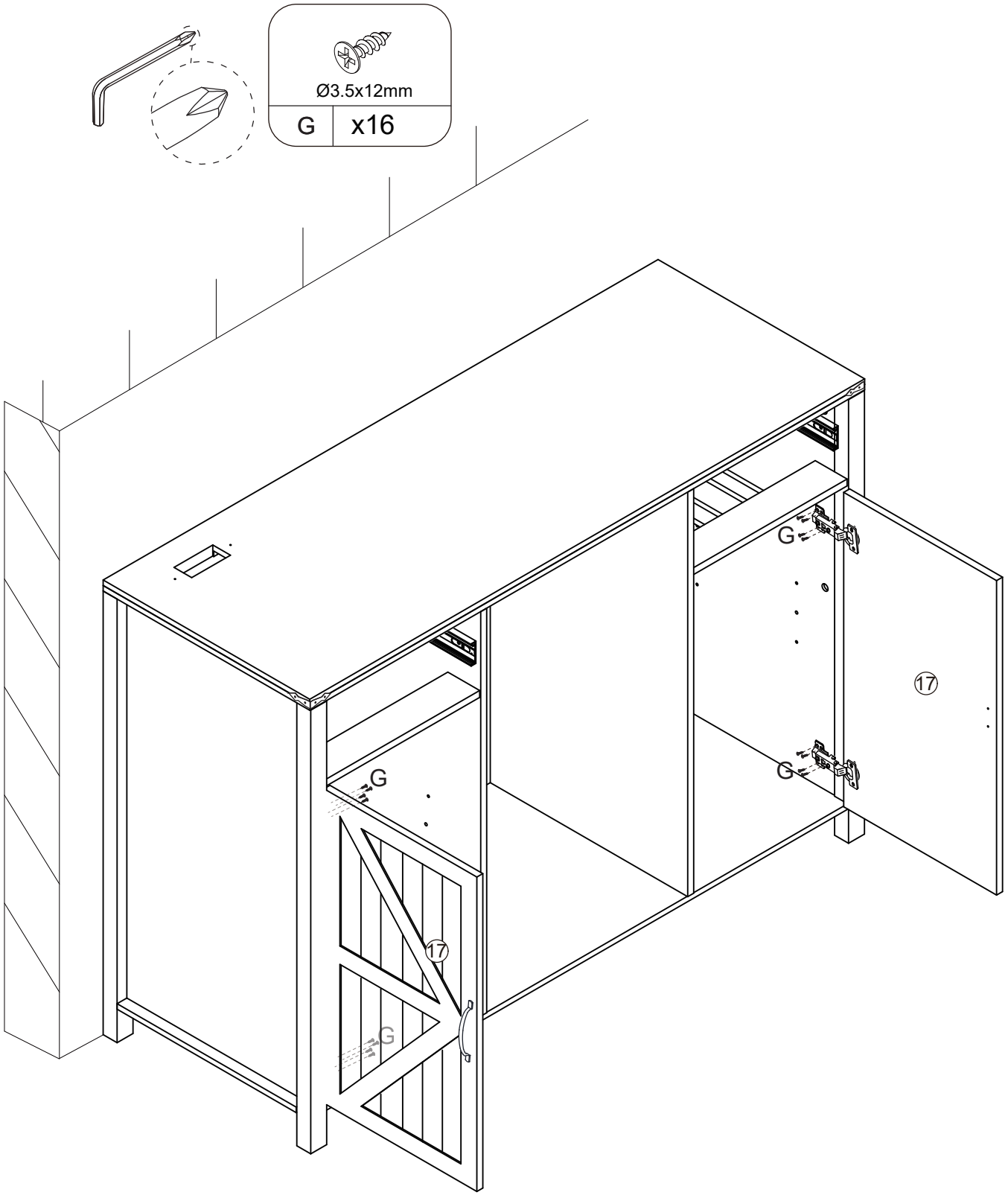

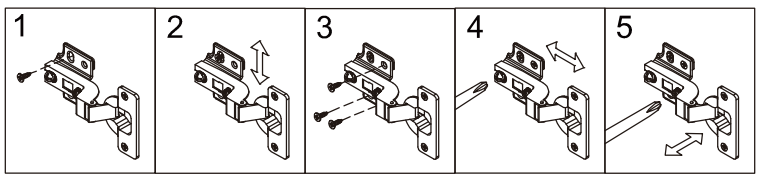

STEP 16

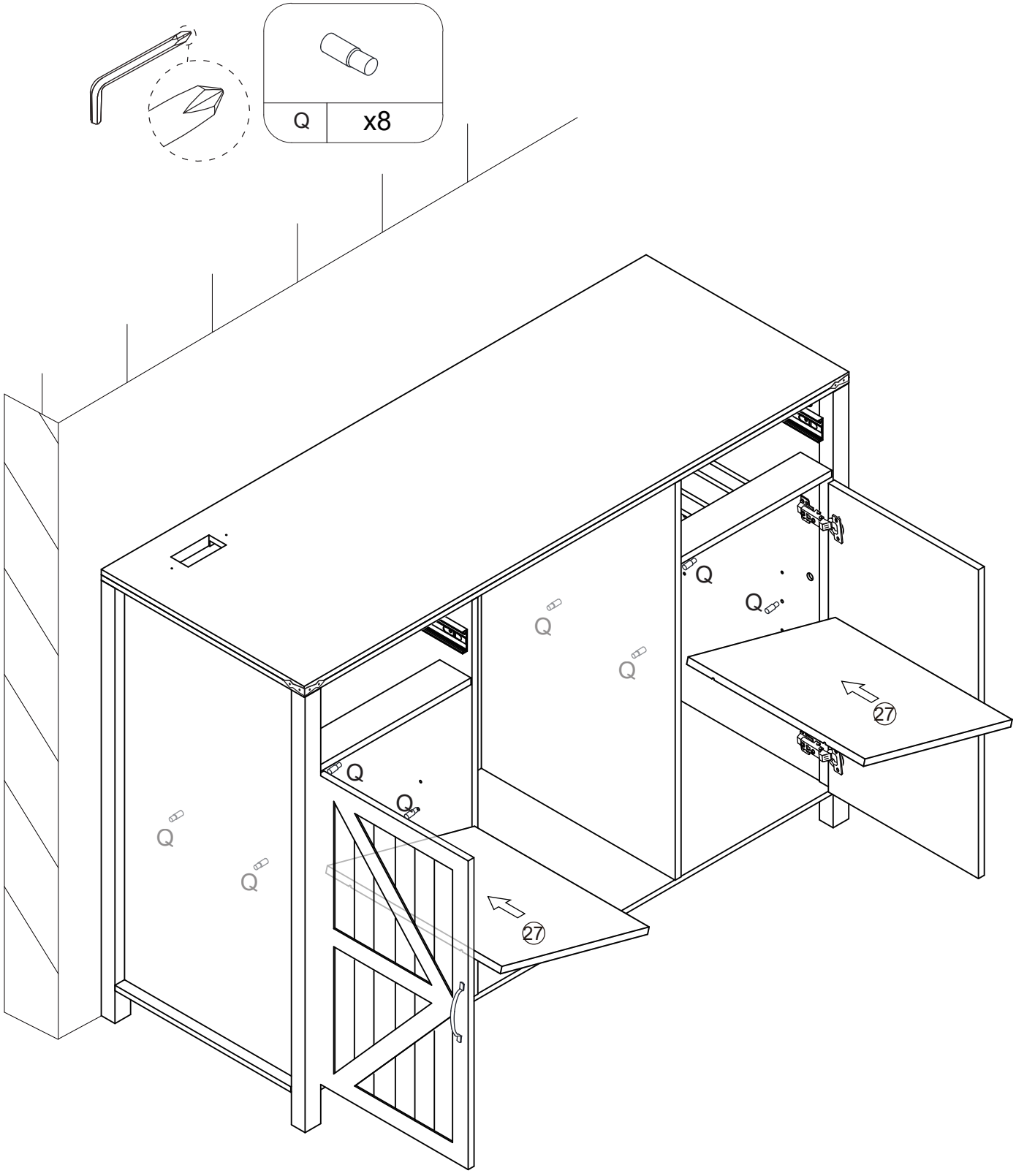

STEP 17

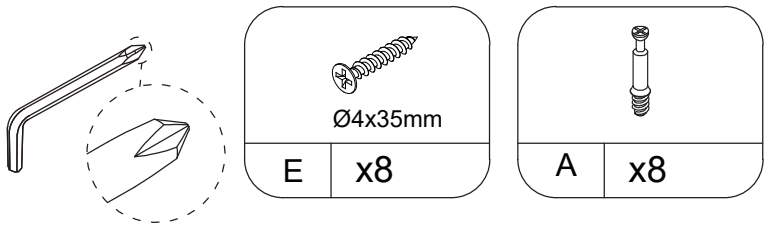

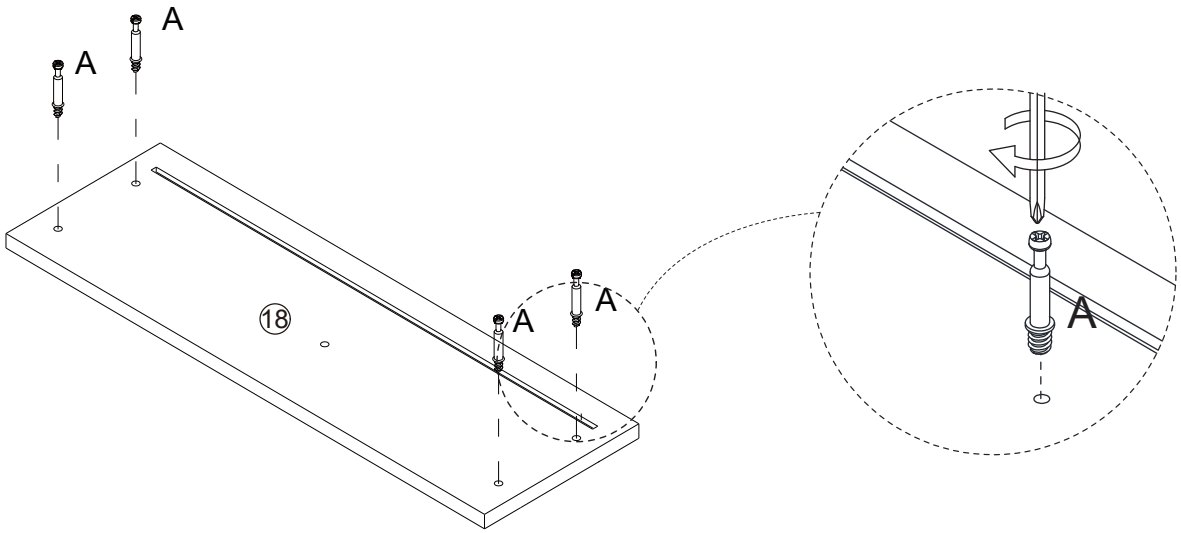

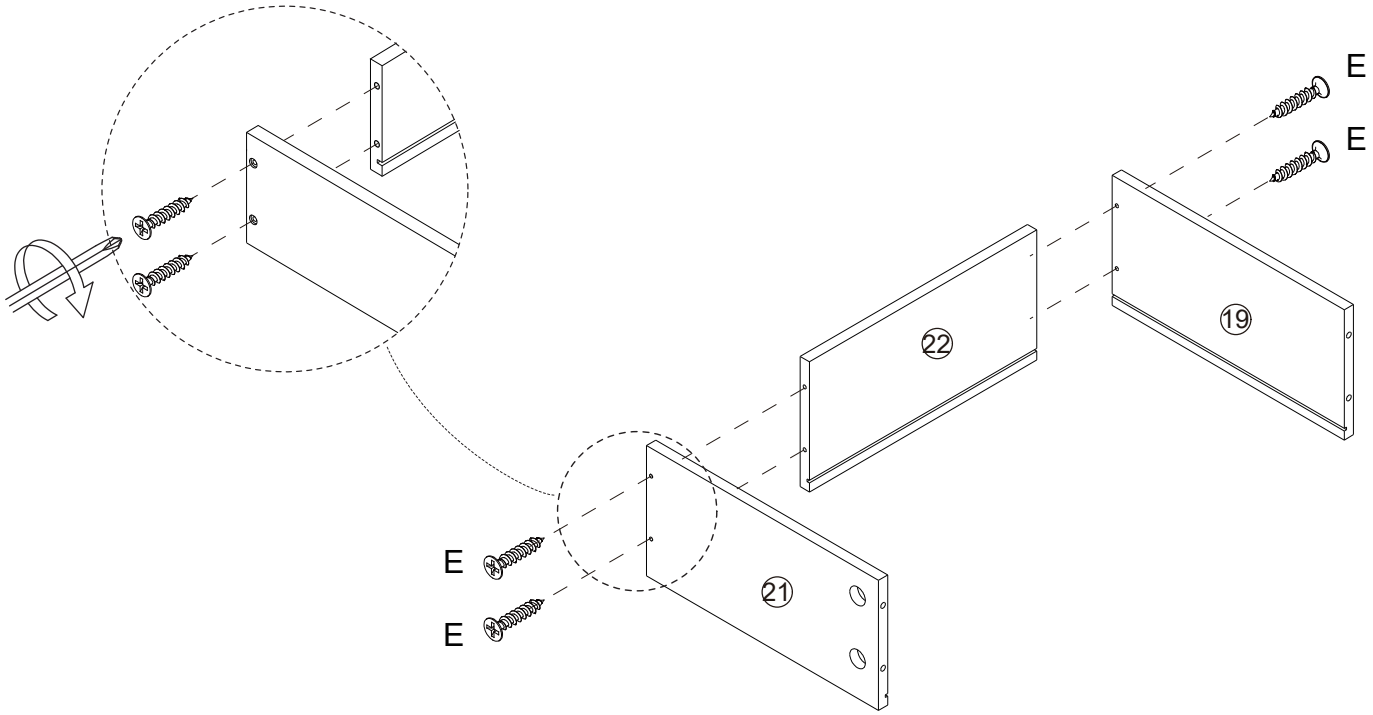

x2

STEP 18

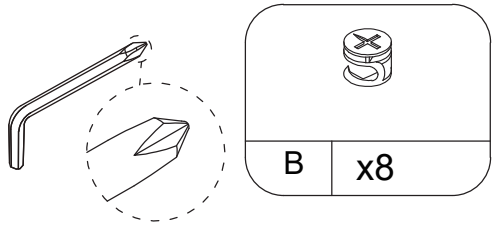

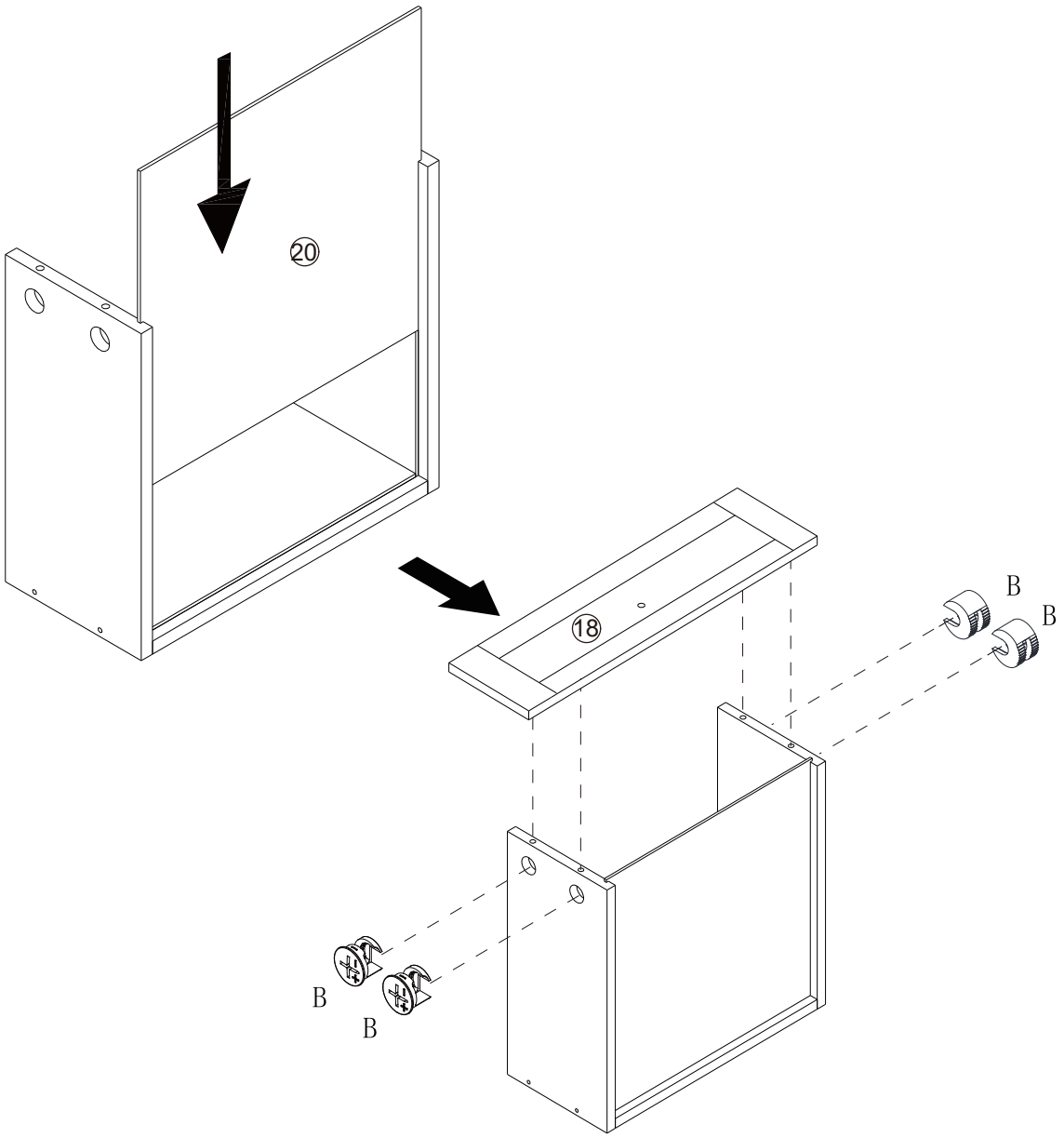

x2

STEP 19

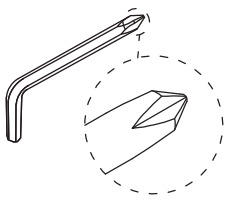

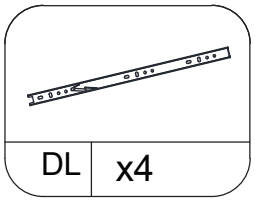

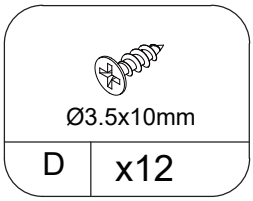

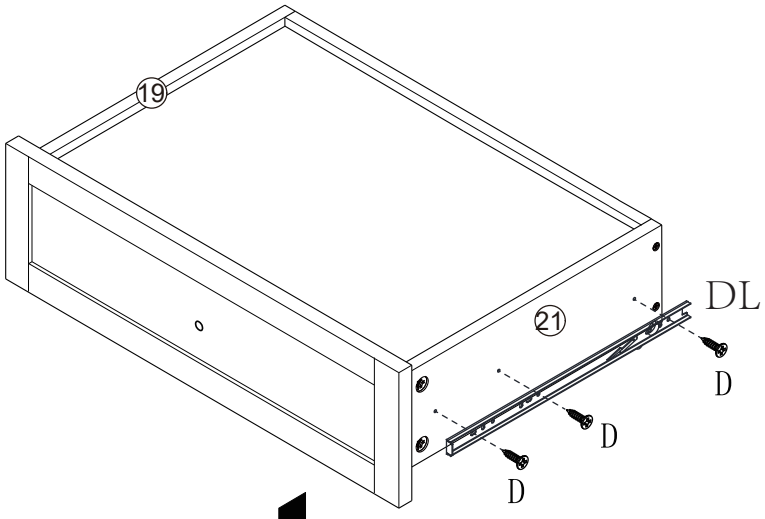

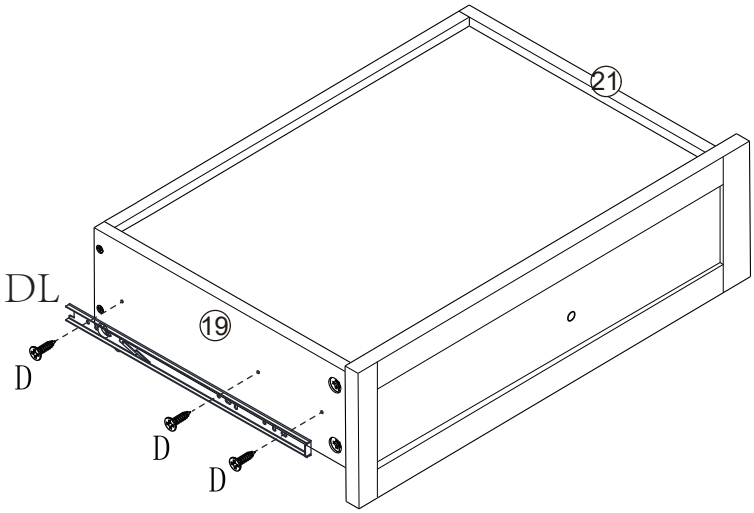

x2

REMARK:



STEP 20

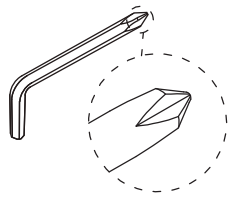

	
K	x2

 Ø4x17mm	
L	x2

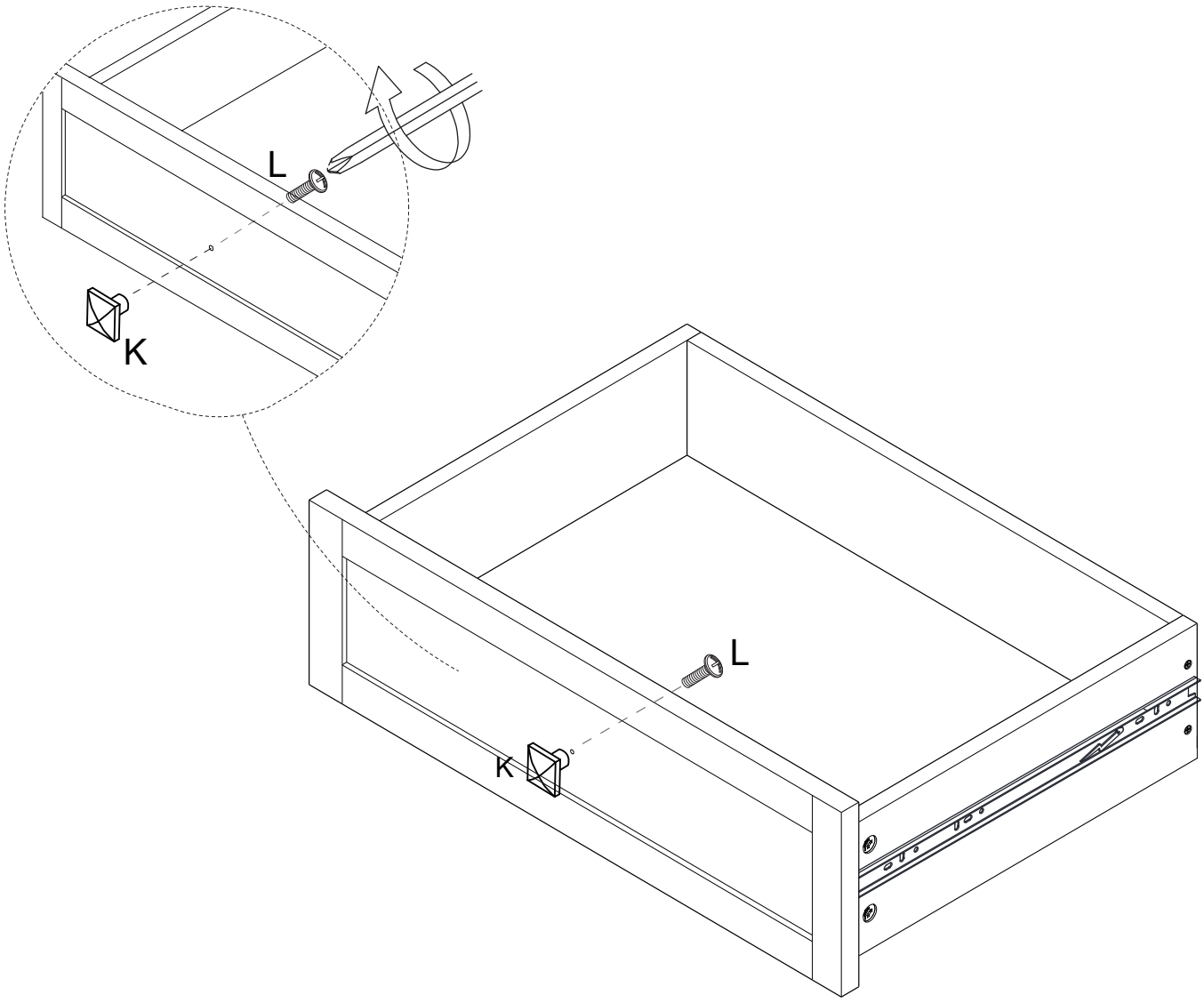

x2

STEP 21

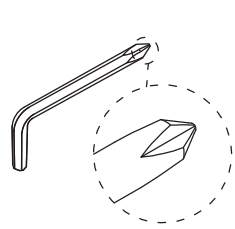

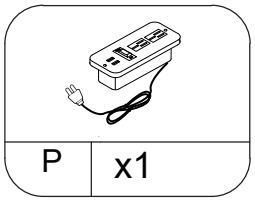

P	x1



Ø3.5x12mm

R	x2

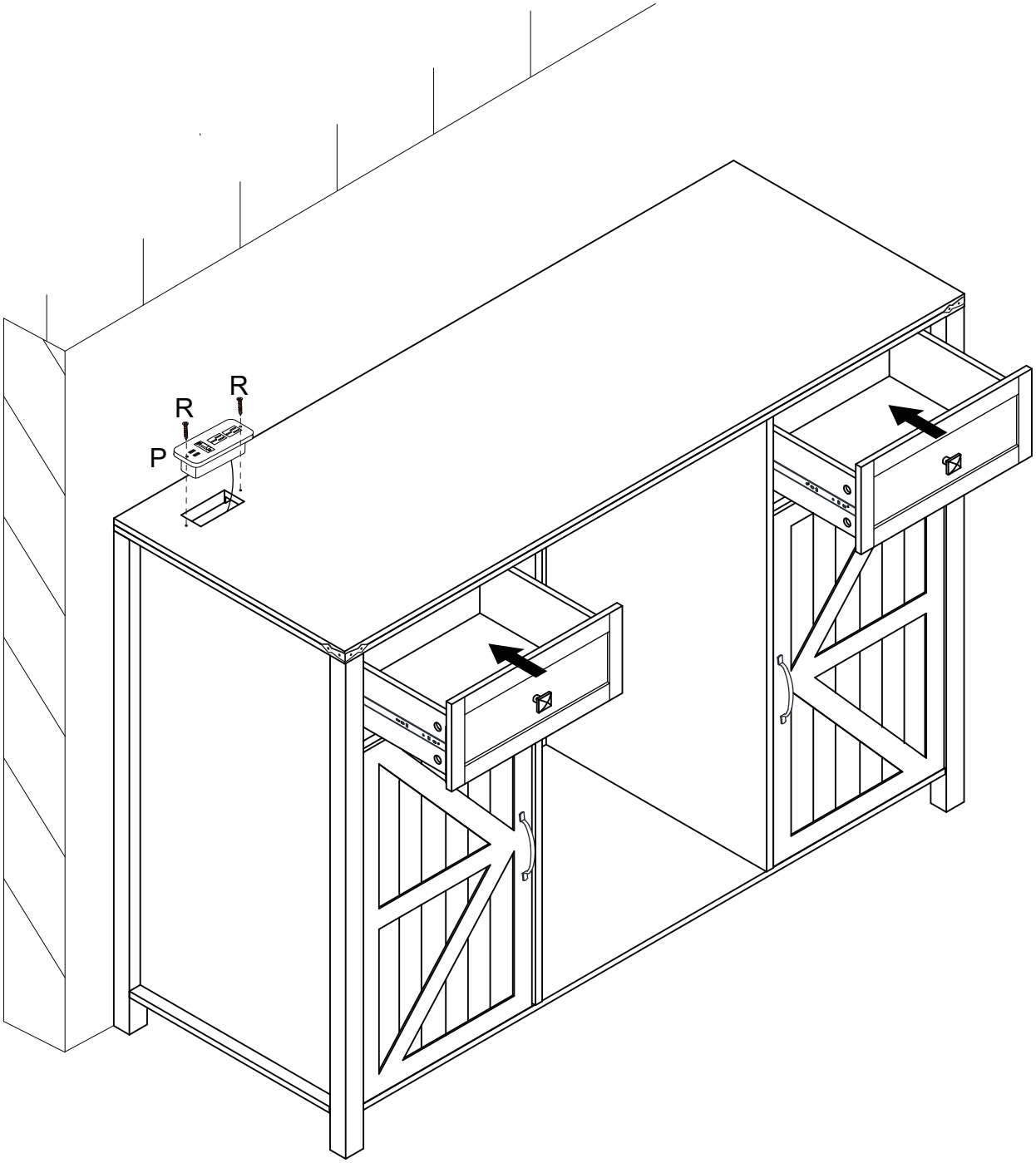

STEP 22

