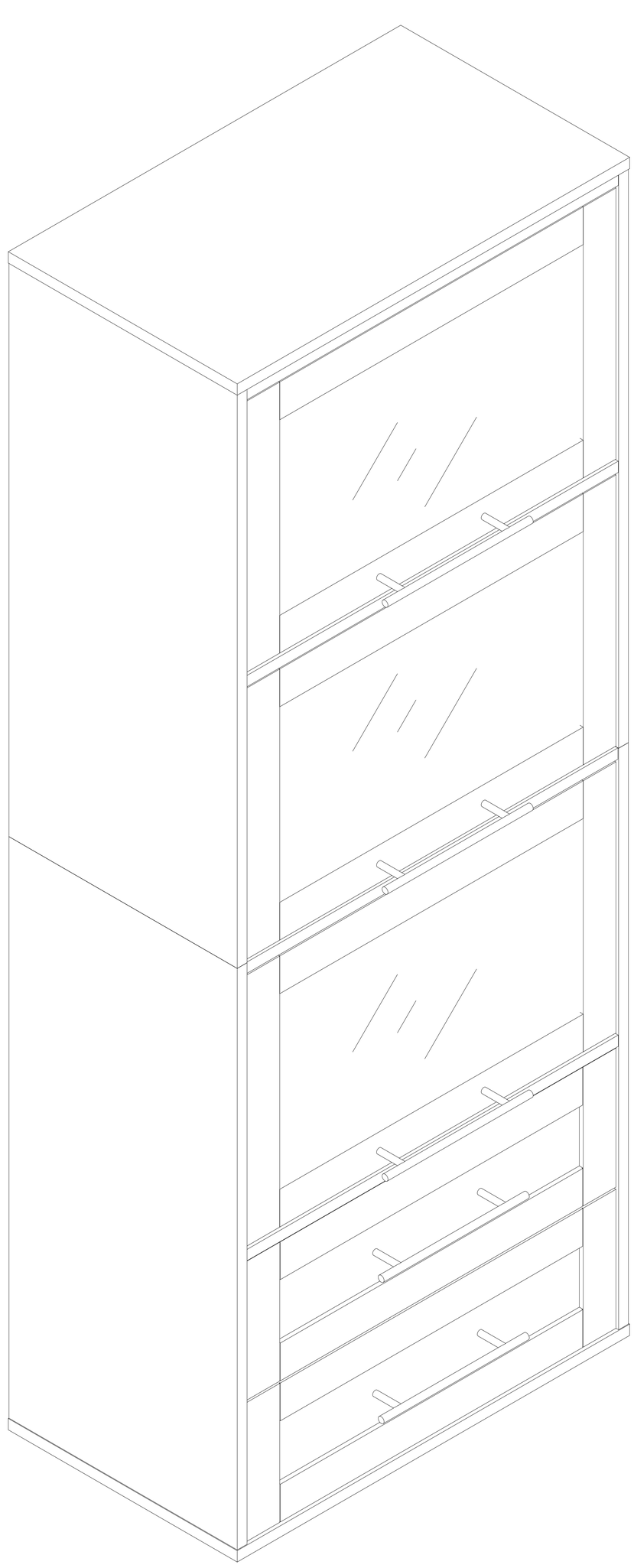

General Guidelines

- Please read the following instruction carefully and use the product accordingly.
- Please keep this manual and hand it over when you transfer the product.
- Please check that you have all the listed components and tools, before you start assembling the item.
- Assemble the item as close to its final position(in the same room) as possible.

Care and Maintanance

- The product is intended for indoor use only. The product must be assembled and used in accordance
- with the provisions of the manual.
- Avoid long-term exposure to humid environments to prevent mildew.
- Keep the product away from fire sources and high temperatures. Do not expose the product to direct sunlight.
- Do not place any hot objects on the surface of the product.

Warning ⚠

- Keep children and animals away from the work area, small parts could choke if swallowed.
- Children are not allowed to climb or stand on the product to avoid personal injury caused by the product tilting or tipping over.
- Please do not use the product if there is/are defective and/or missing part/s, as this can result in damage or injury.
- To avoid the potential dangers of suffocation, please keep all parts and packaging (film, plastic bags, foam, etc.) away from babies and children.

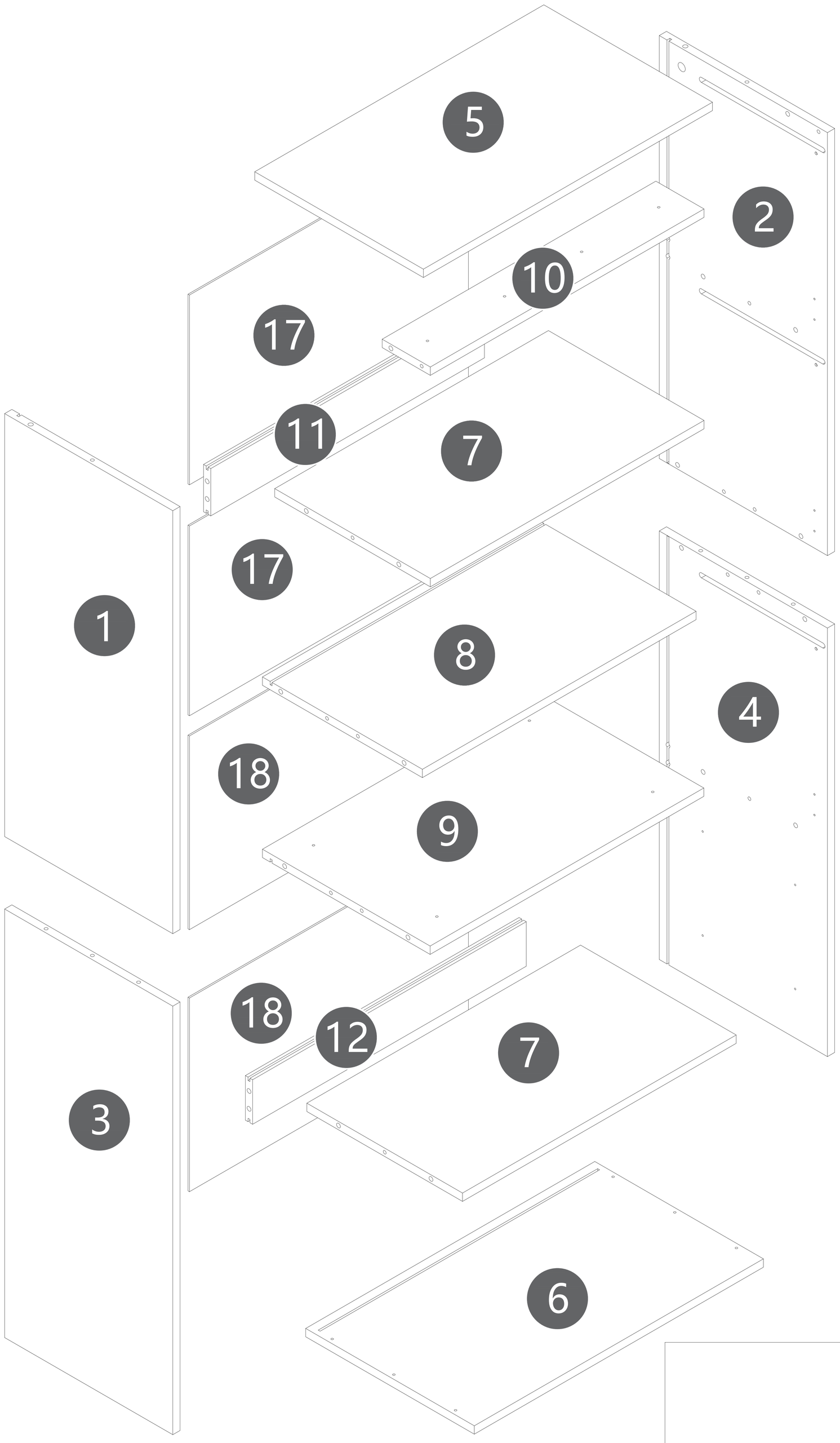
5
2
10
17
11
7
17
1
8
4
18
9
18
12
7
3
6

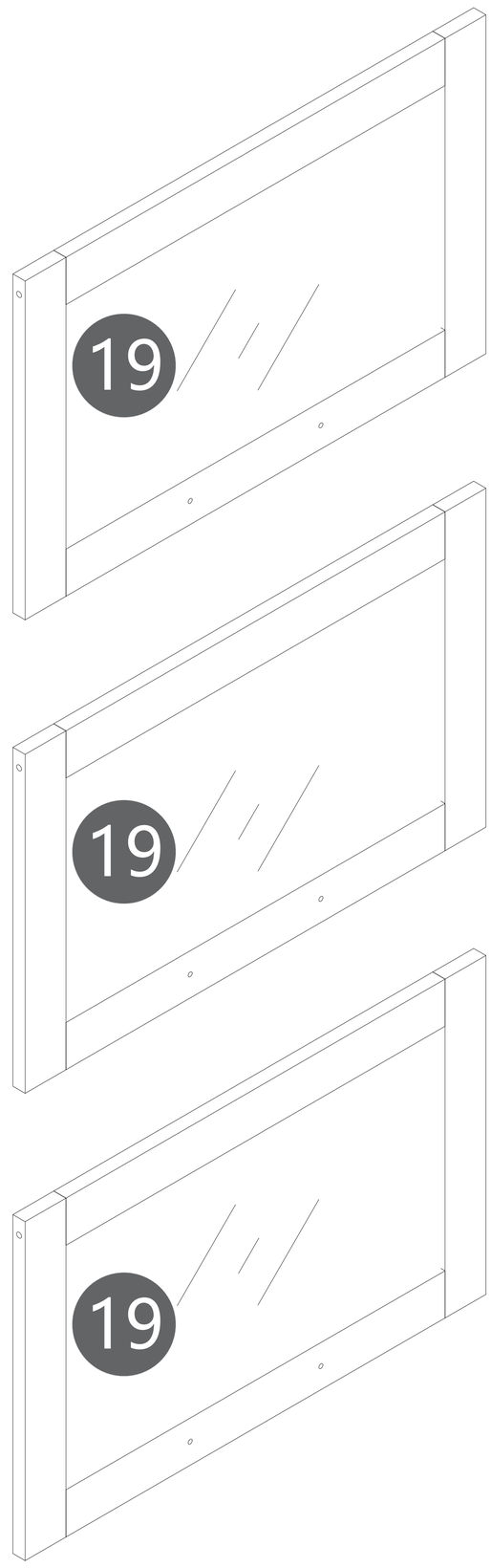
19
19
19

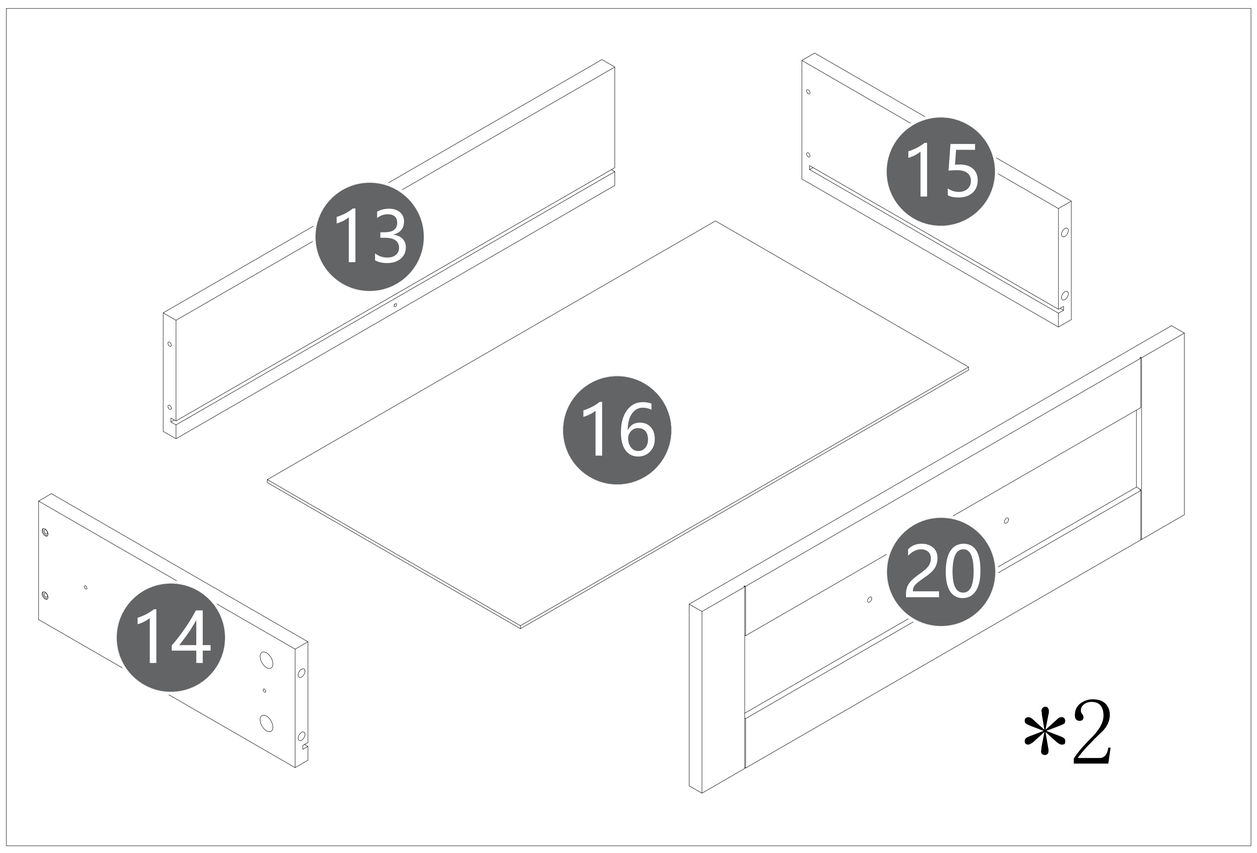
13
15
16
14
20
*2

1 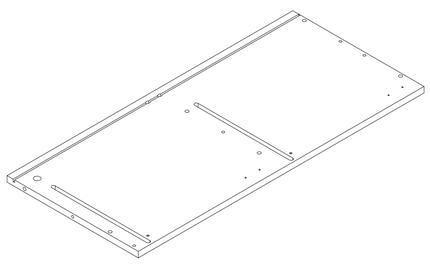 760*349(mm) 29.92*13.74(inch) 1PC	2 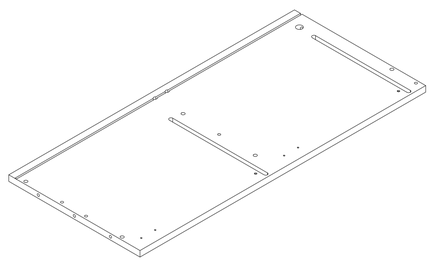 760*349(mm) 29.92*13.74(inch) 1PC	3 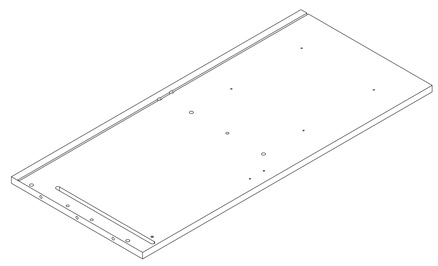 770*349(mm) 30.31*13.74(inch) 1PC	4 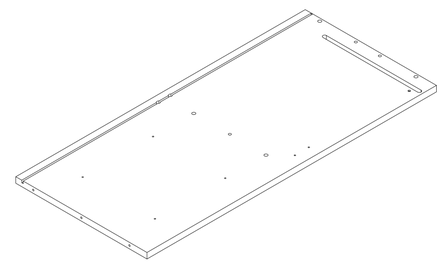 770*349(mm) 30.31*13.74(inch) 1PC	5 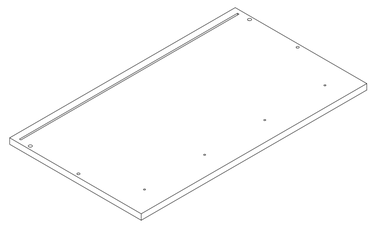 600*350(mm) 23.62*13.78(inch) 1PC
6 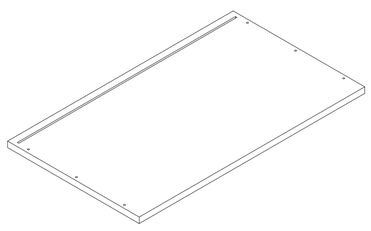 600*20(mm) 23.62*0.79(inch) 1PC	7 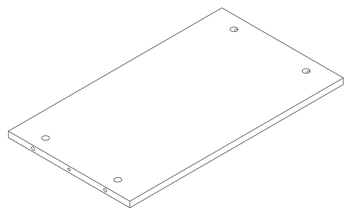 568*323(mm) 22.36*12.72(inch) 2PCS	8 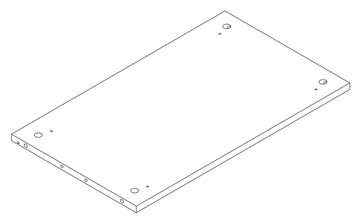 568*332(mm) 22.36*13.07(inch) 1PC	9 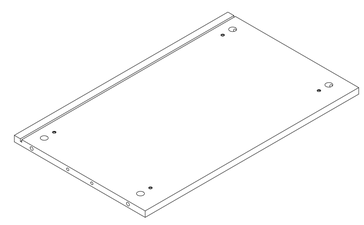 568*348(mm) 22.36*13.7(inch) 1PC	10 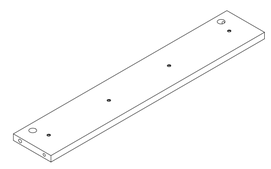 568*100(mm) 22.36*3.94(inch) 1PC
11 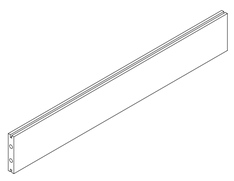 568*85(mm) 22.36*3.35(inch) 1PC	12 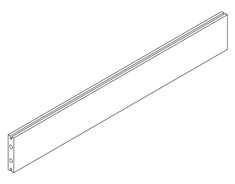 568*80(mm) 22.36*3.15(inch) 1PC	13 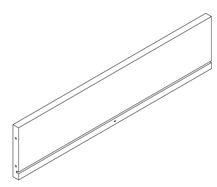 513*120(mm) 20.2*4.72(inch) 2PCS	14 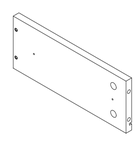 300*120(mm) 11.81*4.72(inch) 2PCS	15 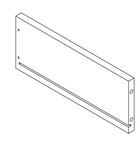 300*120(mm) 11.81*4.72(inch) 2PCS
16 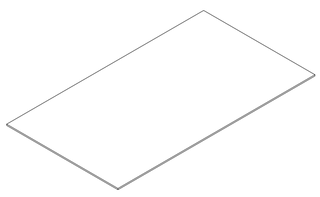 524*296(mm) 20.63*11.65(inch) 2PCS	17 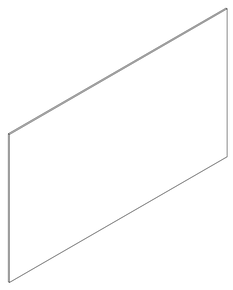 341*579(mm) 13.43*22.8(inch) 2PCS	18 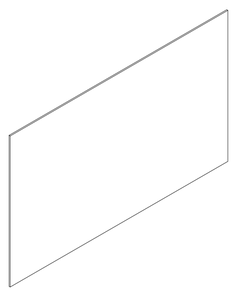 348*579(mm) 13.7*22.8(inch) 2PCS	19 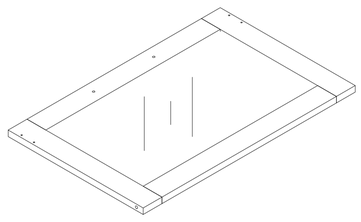 359*564(mm) 14.13*22.2(inch) 3PCS	20 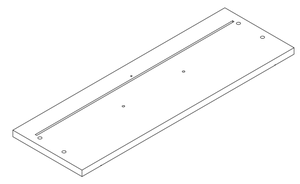 564*184(mm) 22.2*7.24(inch) 2PCS

A 36x

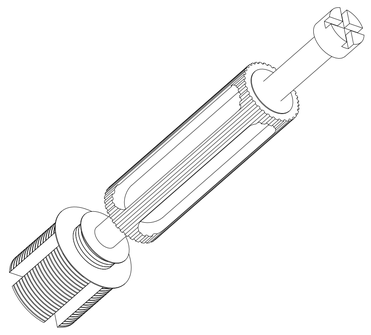

B 36x

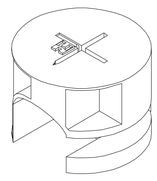

15x12mm

C 20x

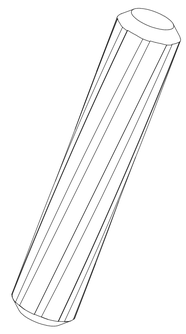

M8x40mm

D 6x

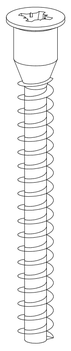

M7x50mm

E 12x

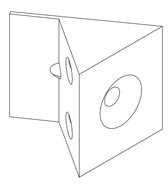

F 16x

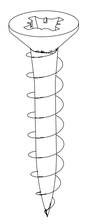

M3x12mm

G 16x

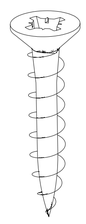

M3.5x14mm

H 8x

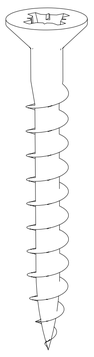

M3.5x35mm

I 24x

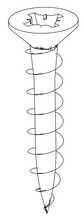

M3x14mm

J 2x

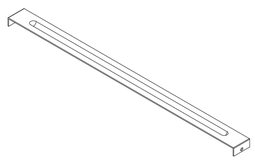

284mm

K 2x

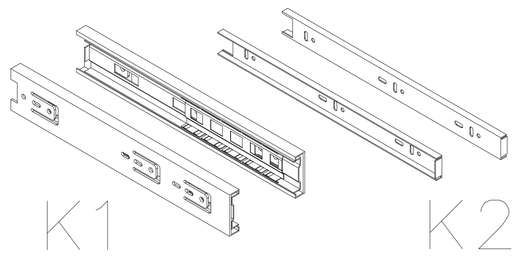

K1 K2

300mm

L 6x



L1 L2

M 6x

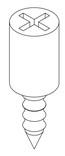

N 5x

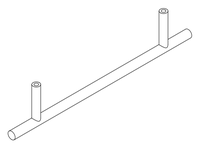

160mm

O 4x

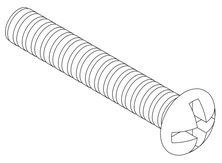

M4x16mm

P 6x

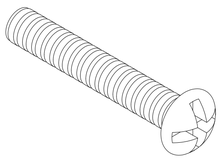

M4x22mm

Q 2x



M8x30mm

R 6x



M8x40mm

S 8x

M6x20mm

T 2x



T1 T2 T3 T4 T5

U 8x



V 4x

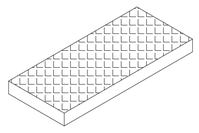

15x30mm

Hardware installation demonstration

NOTE:Please make sure "A"hardware tightened and can't be pulled out!

I

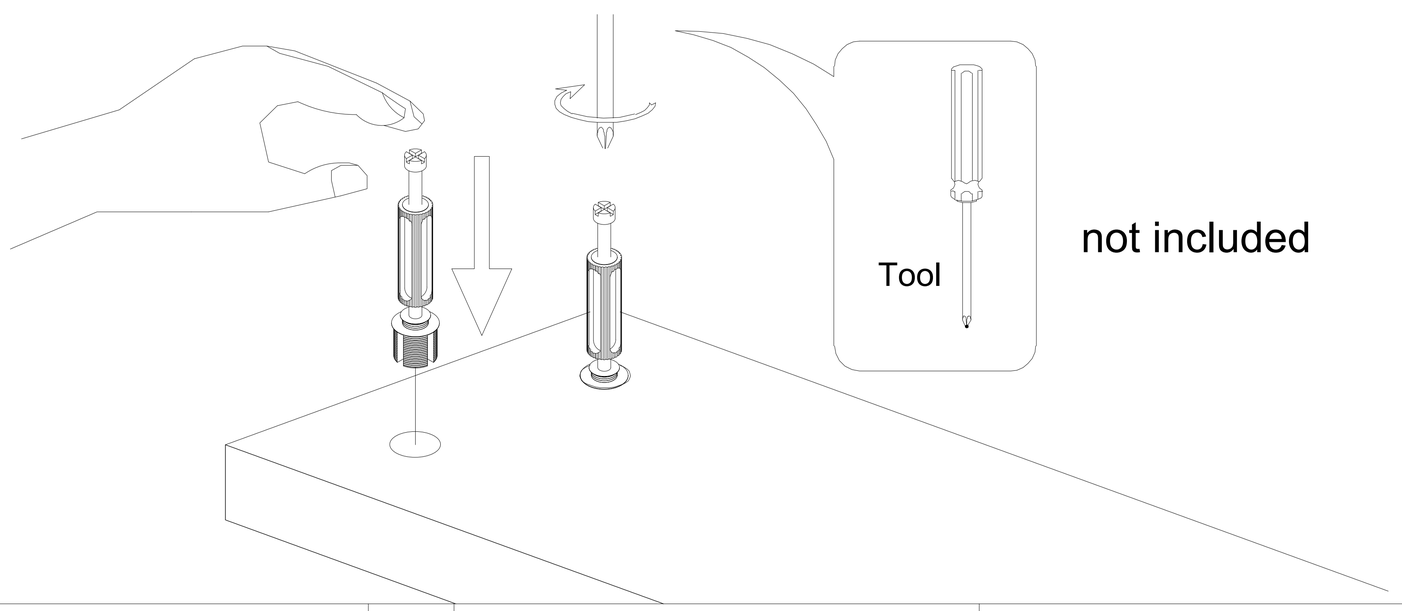

II

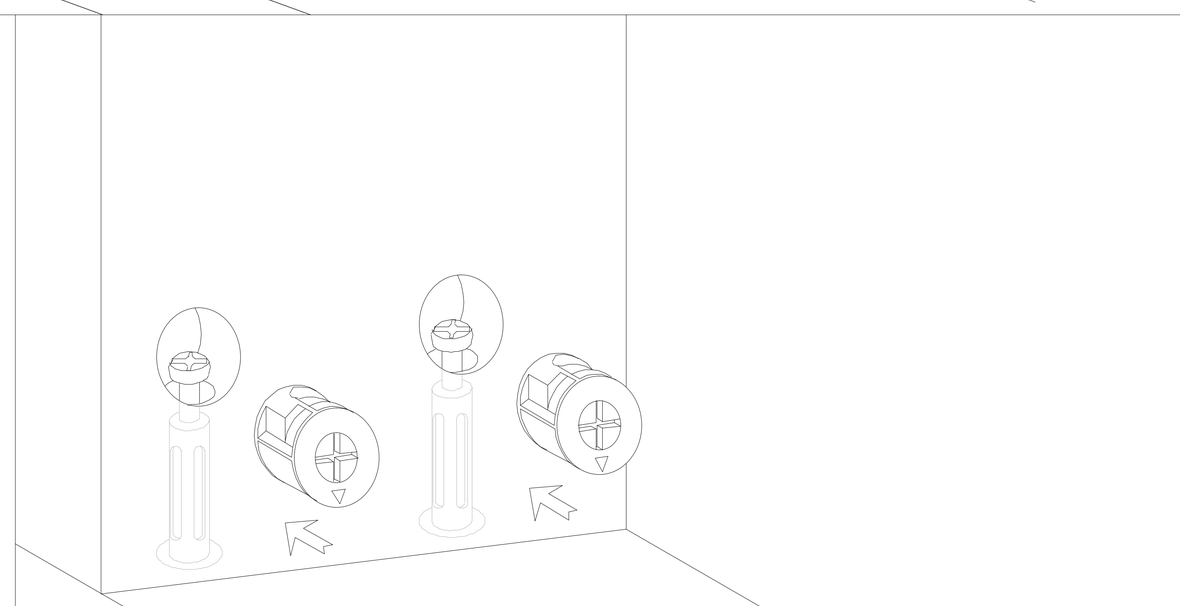

III

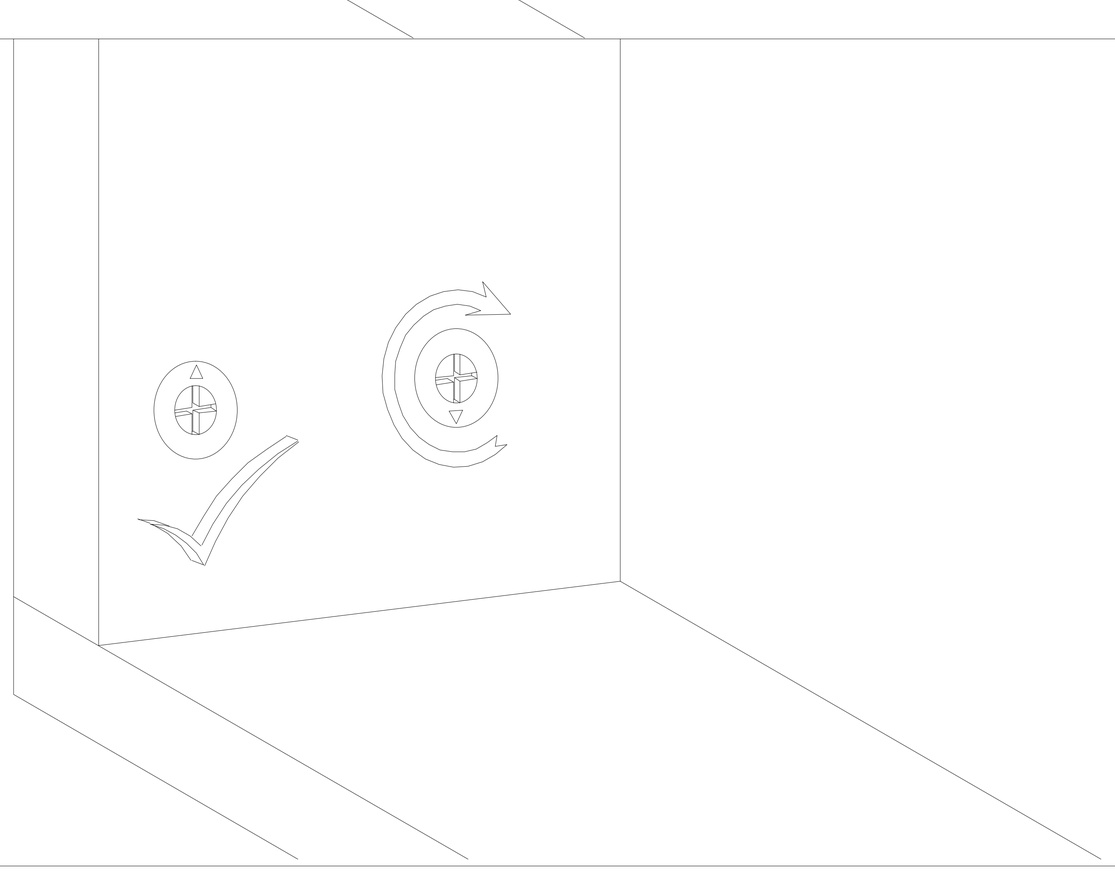

01

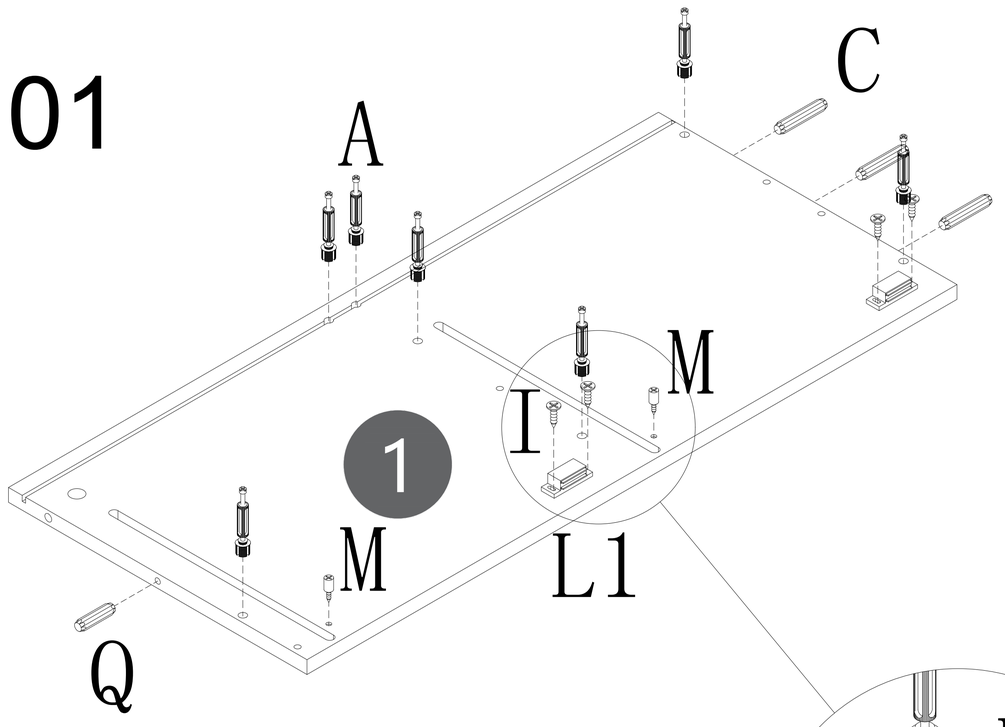
A
C
M
I
1
M
L1
Q

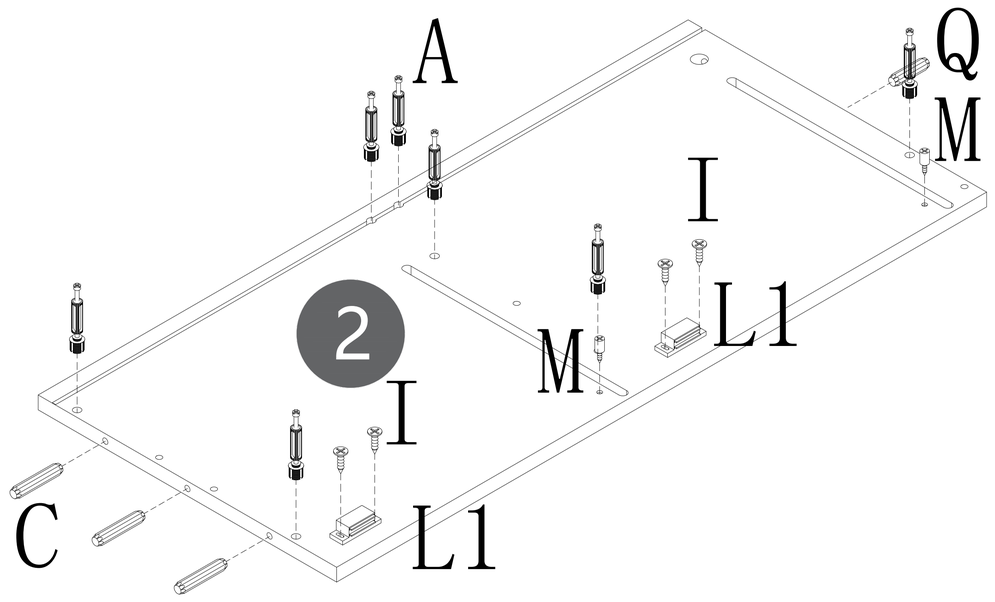
A
Q
M
I
2
M
L1
I
C
L1

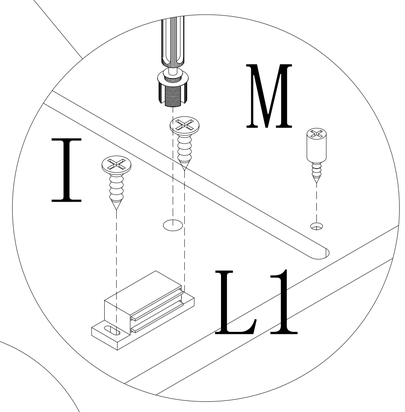
M
I
L1

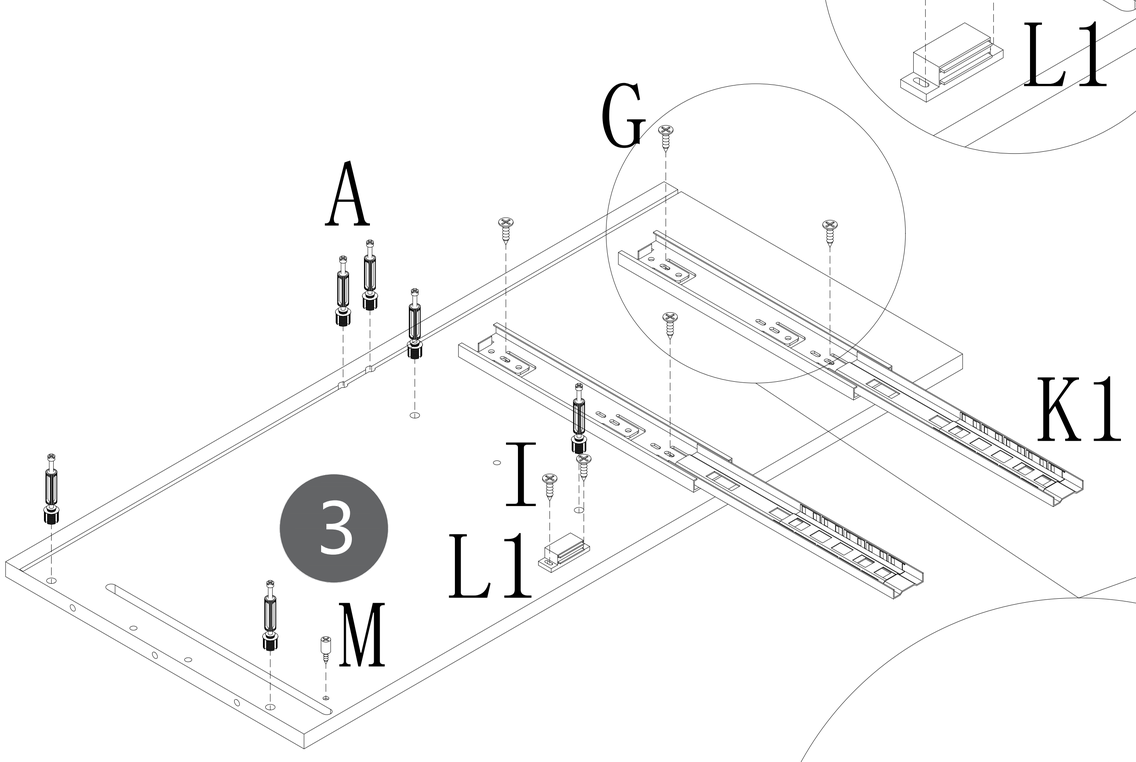
G
A
K1
I
3
L1
M

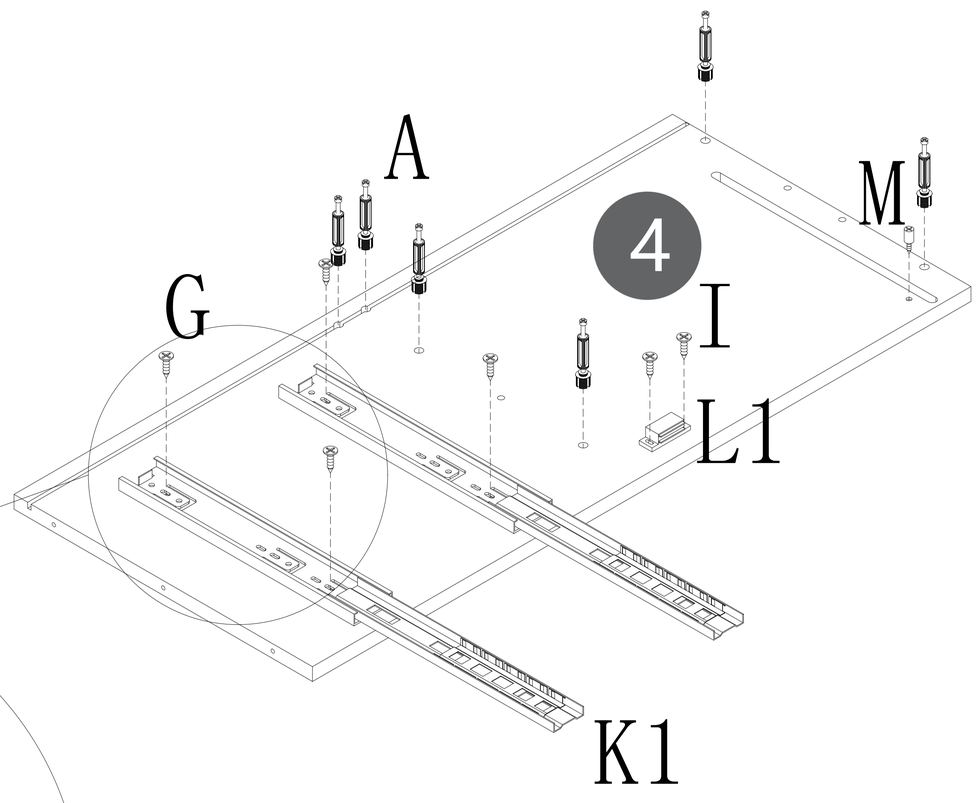
A
M
4
G
I
L1
K1

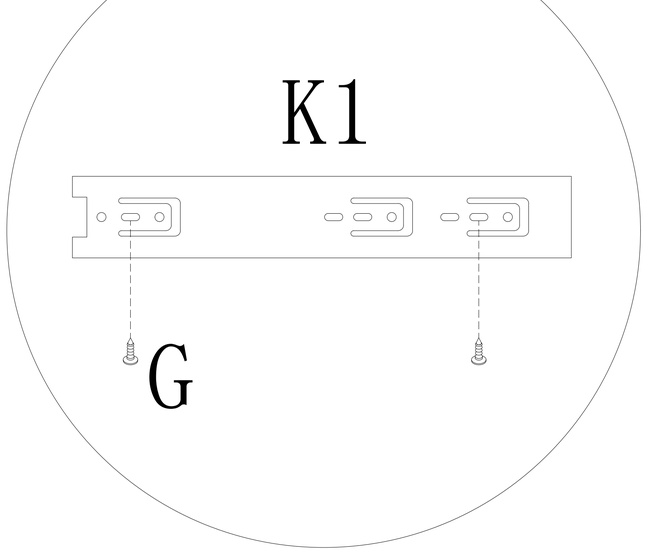
K1
G

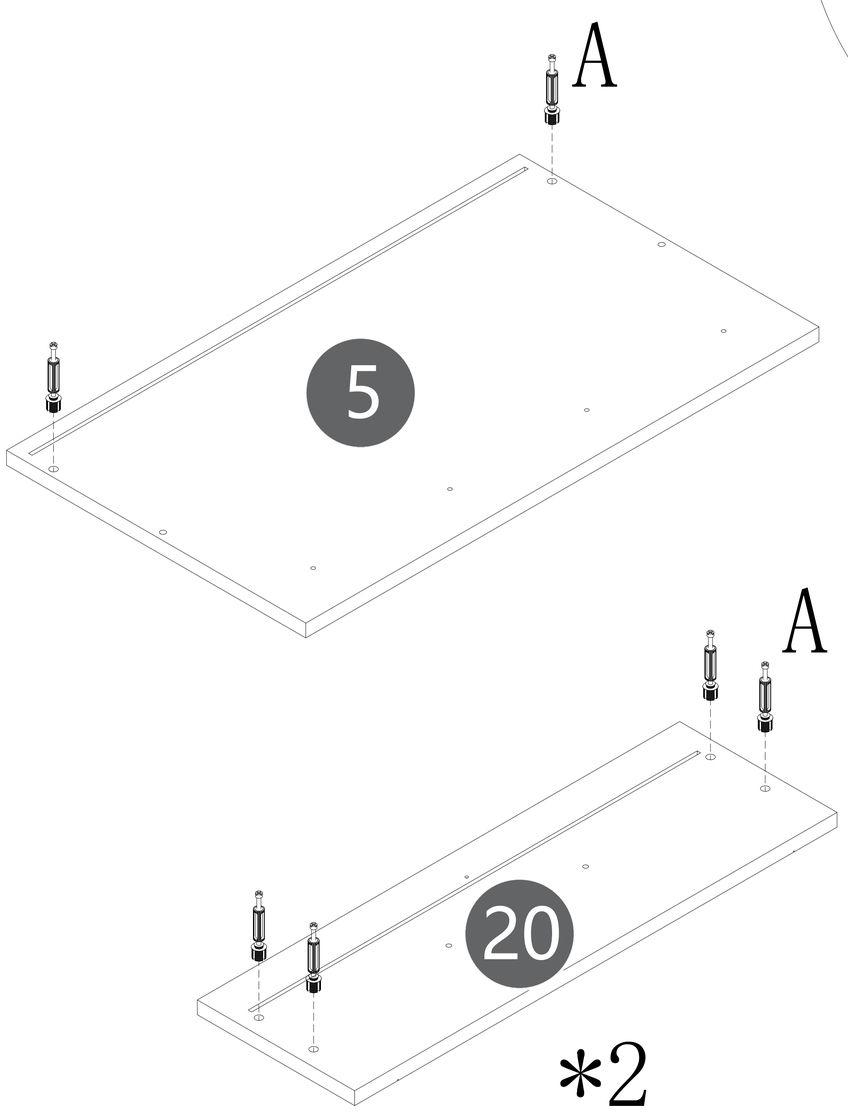
A
5

A
20
*2

A
36x

C
6x

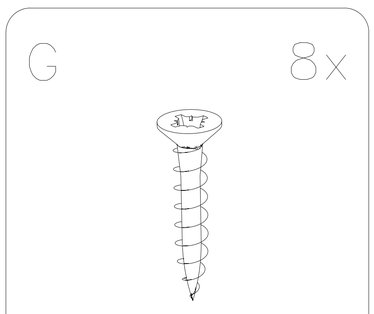
G
8x


I
12x

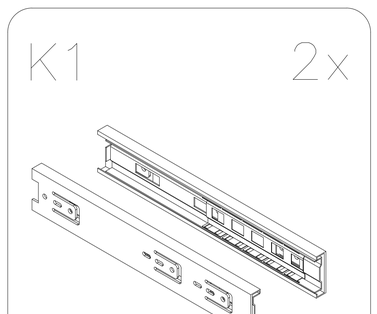
K1
2x

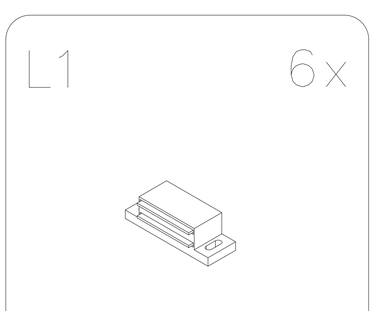
L1
6x

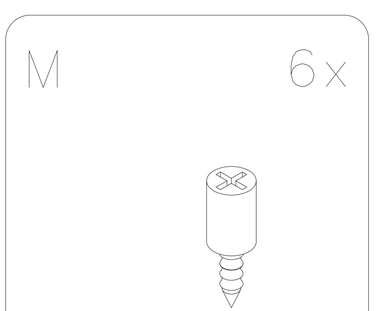
M
6x

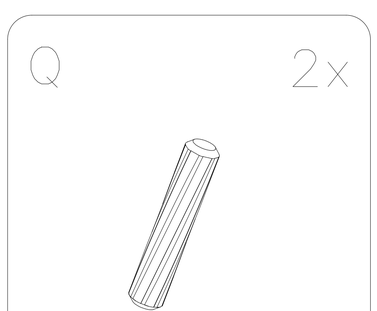
Q
2x

02

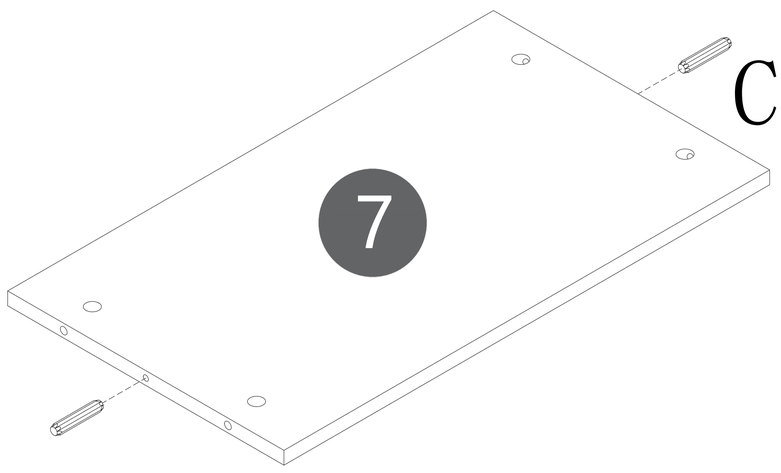

*2

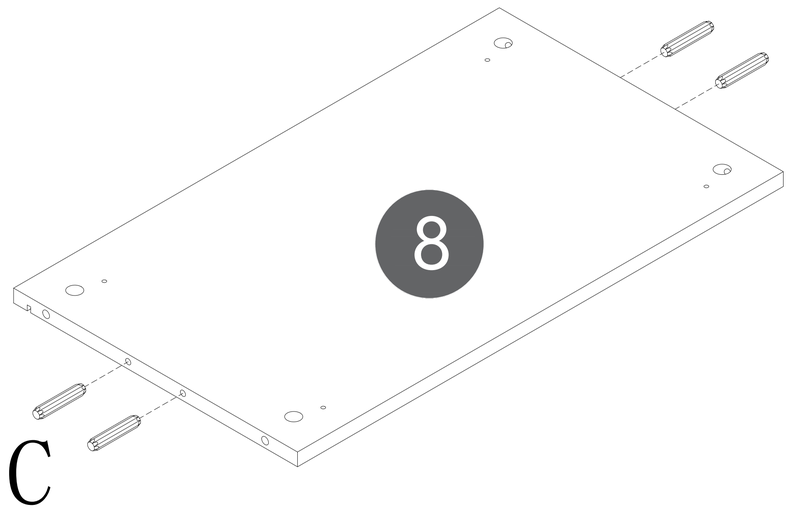

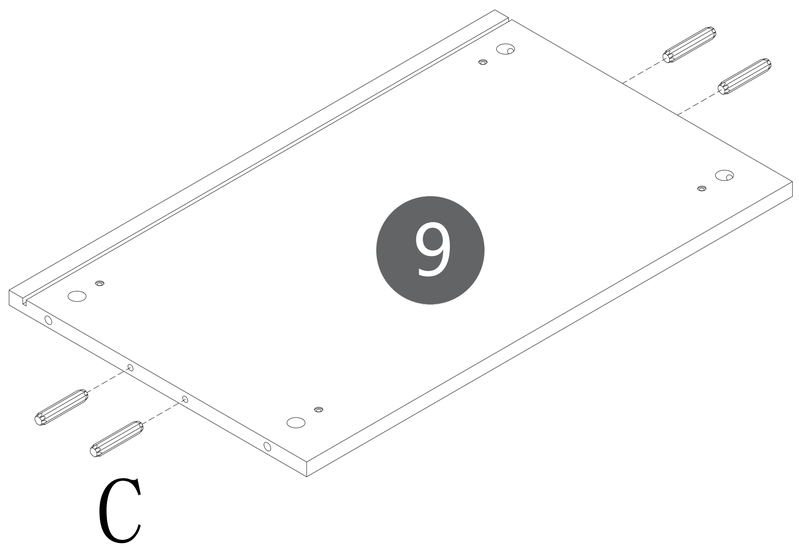

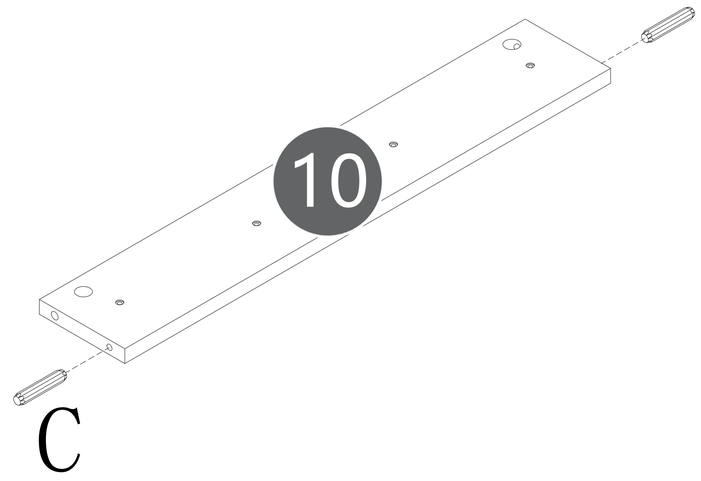

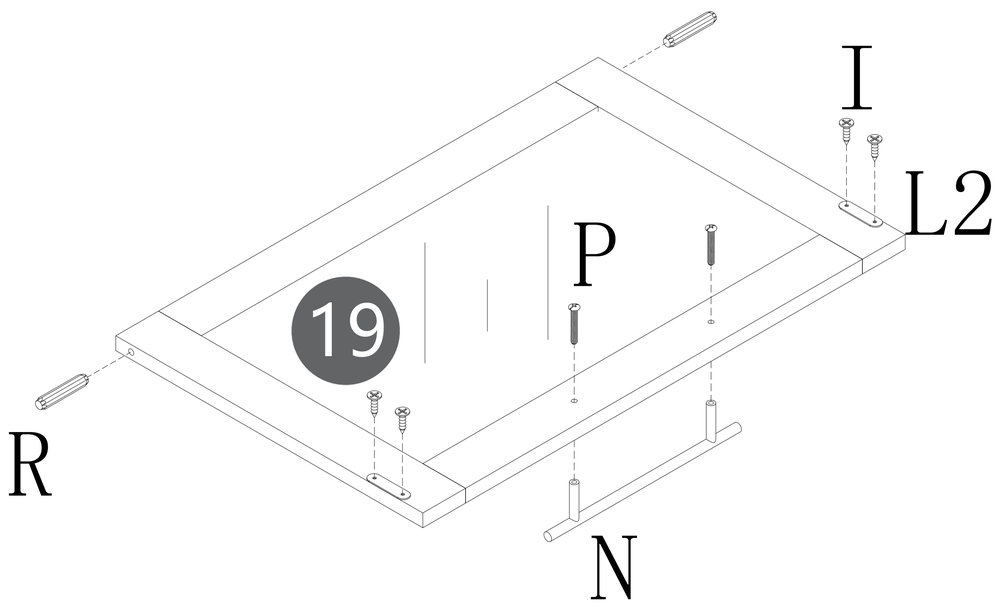

*3

C 14x 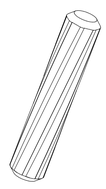	I 12x 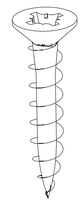
L2 6x 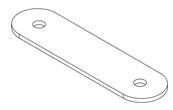	N 3x 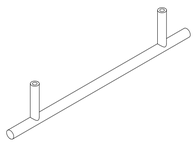
P 6x 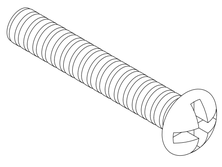	R 6x 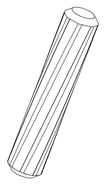

03

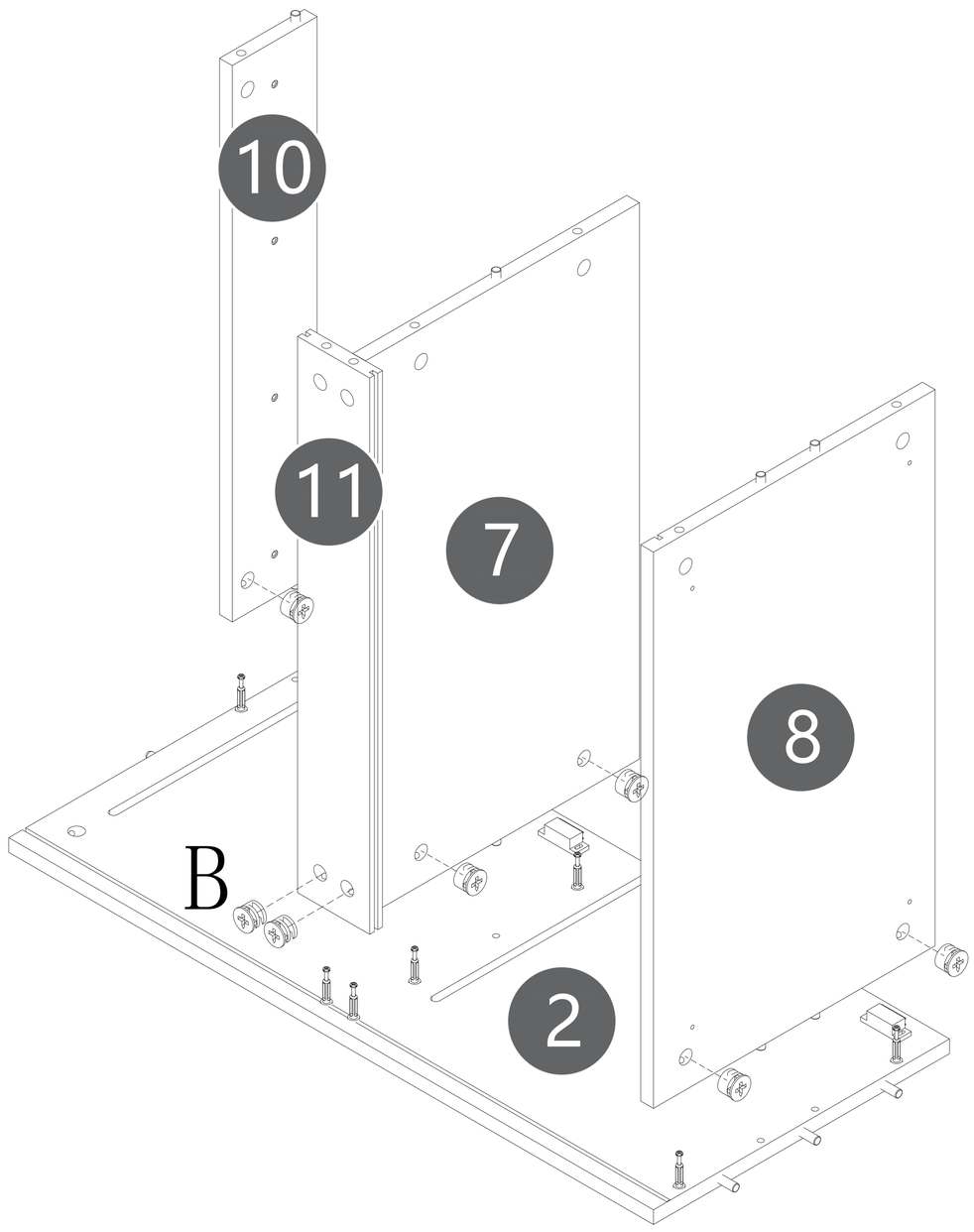

B 7x



04

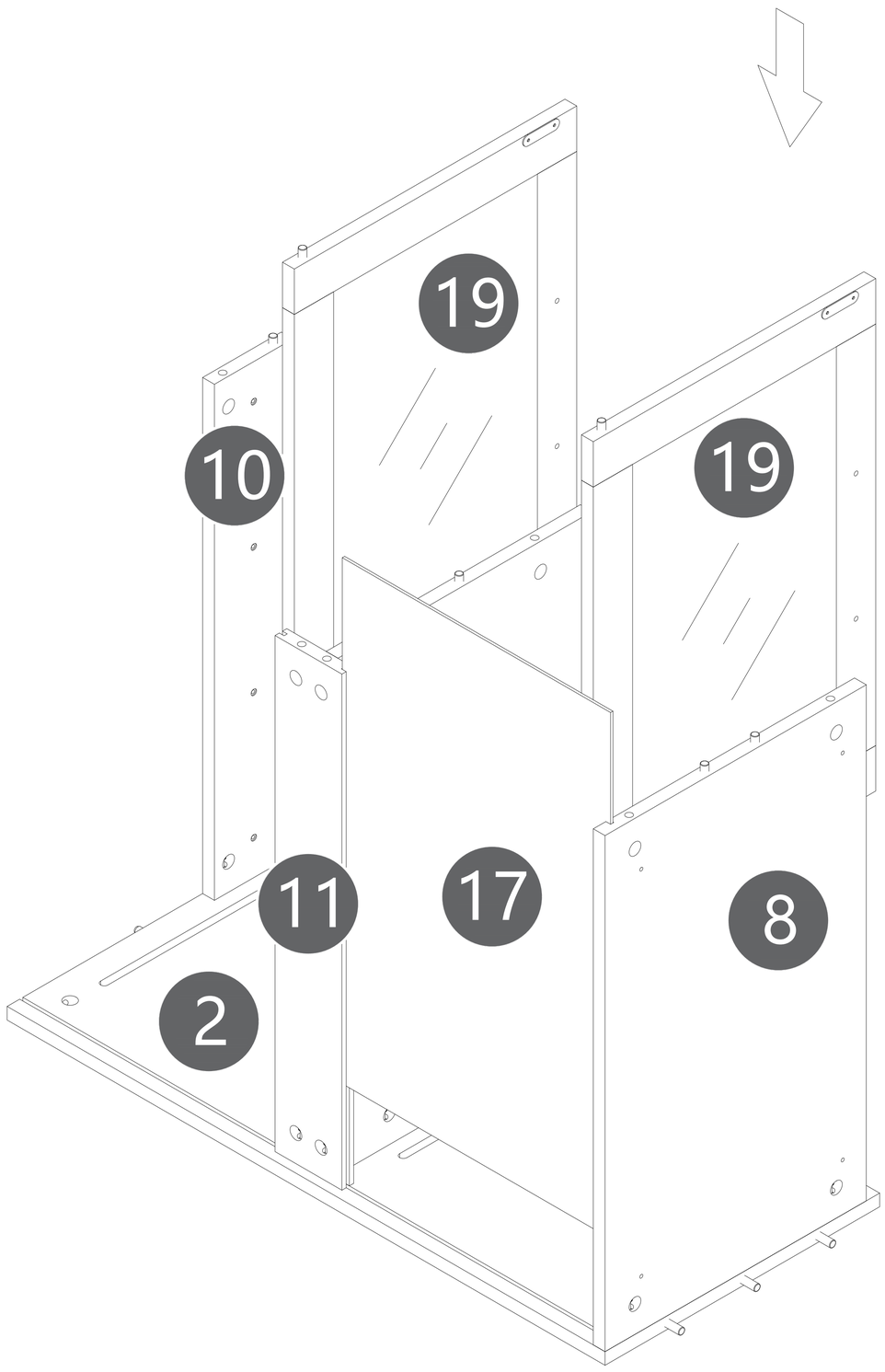

05

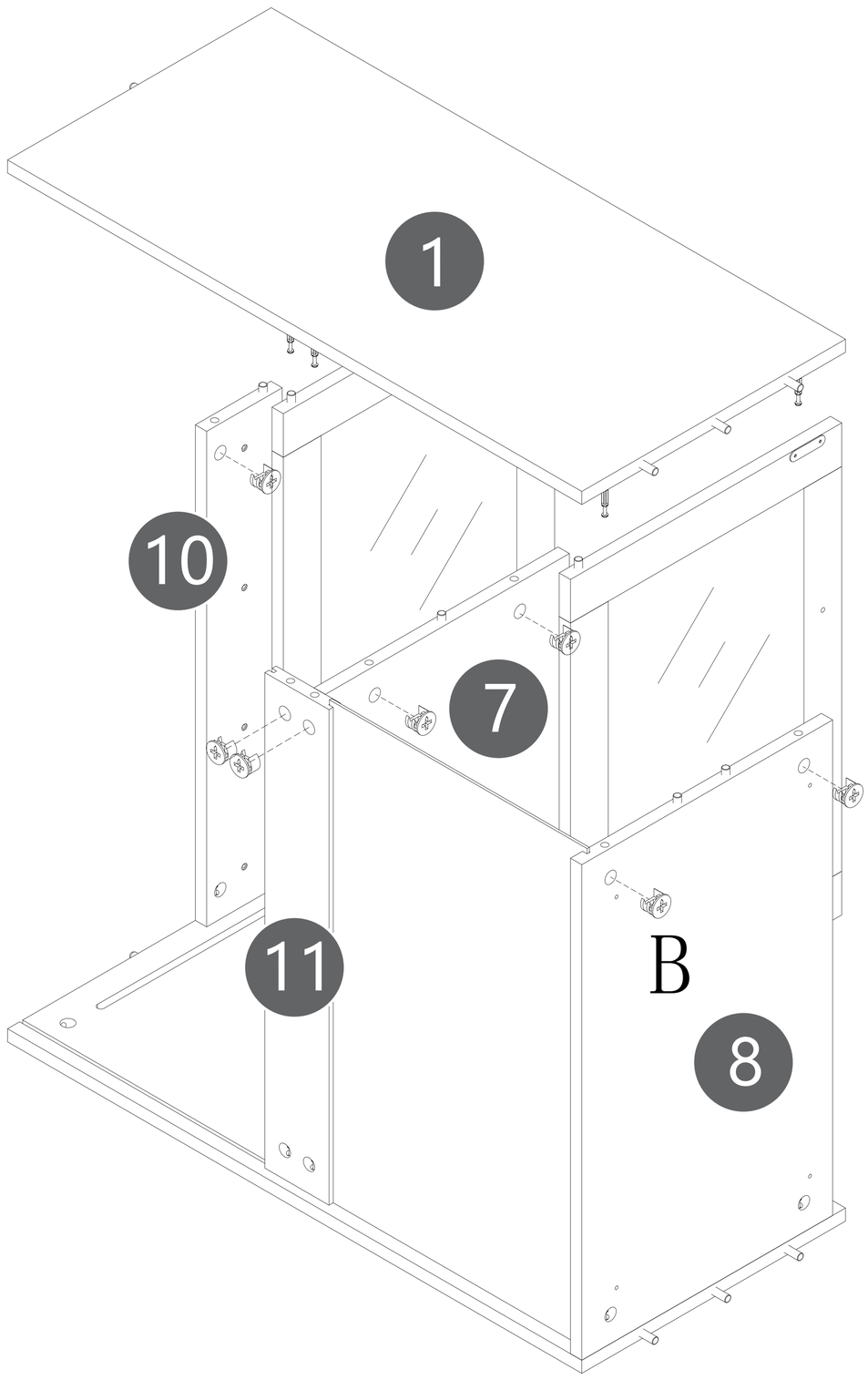

B 7x



06

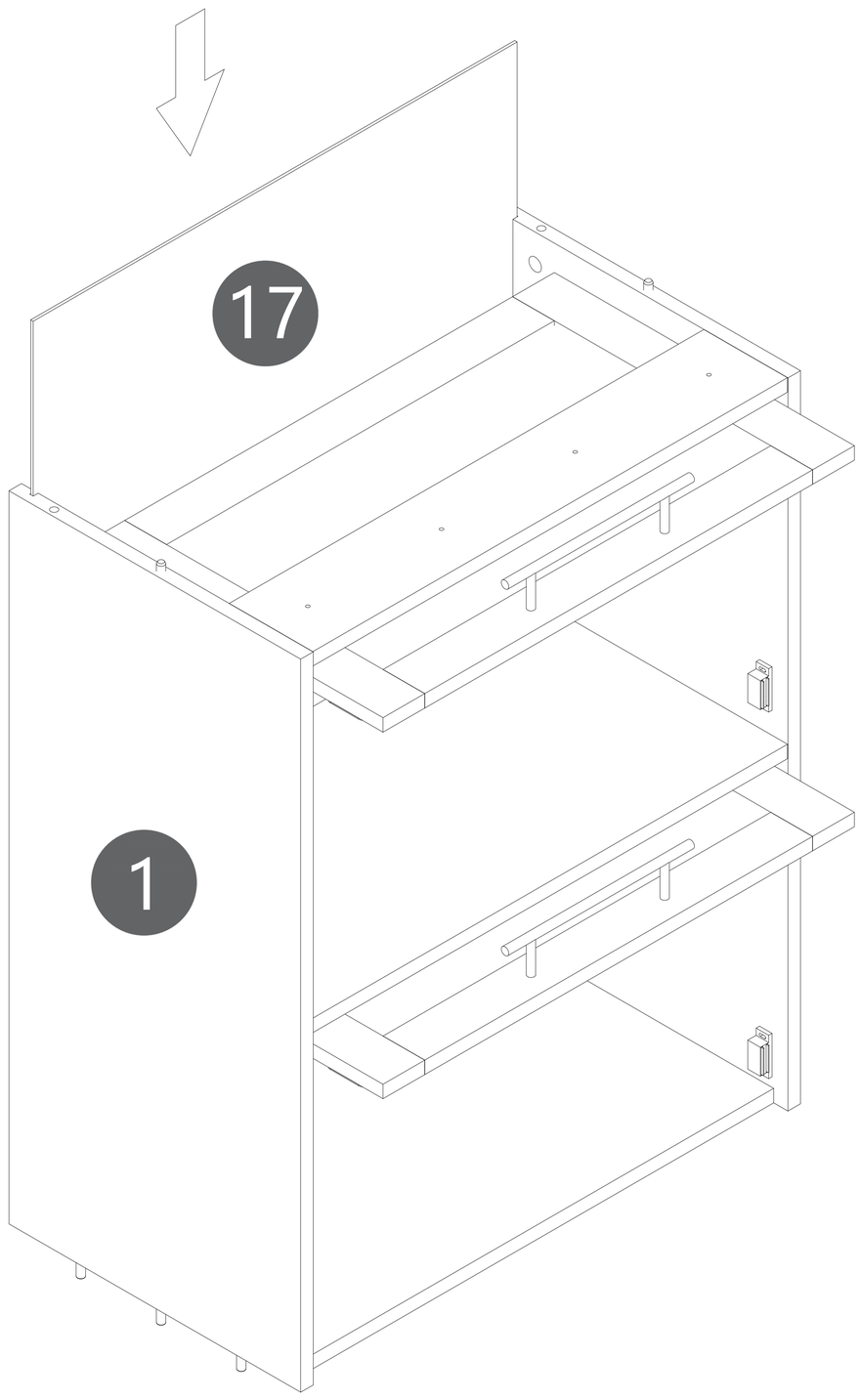

07

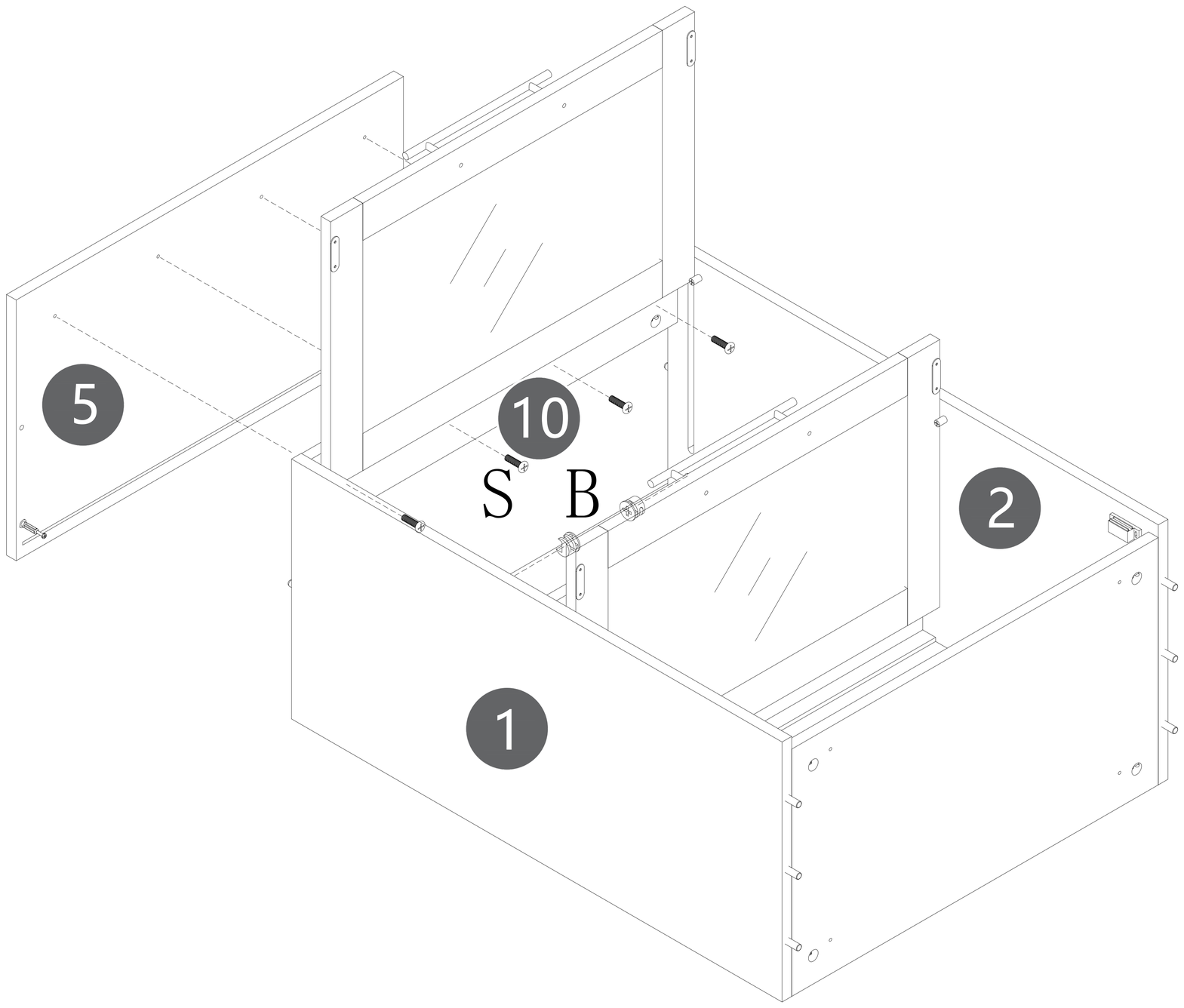

B 2x



S 4x

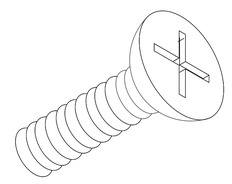

08

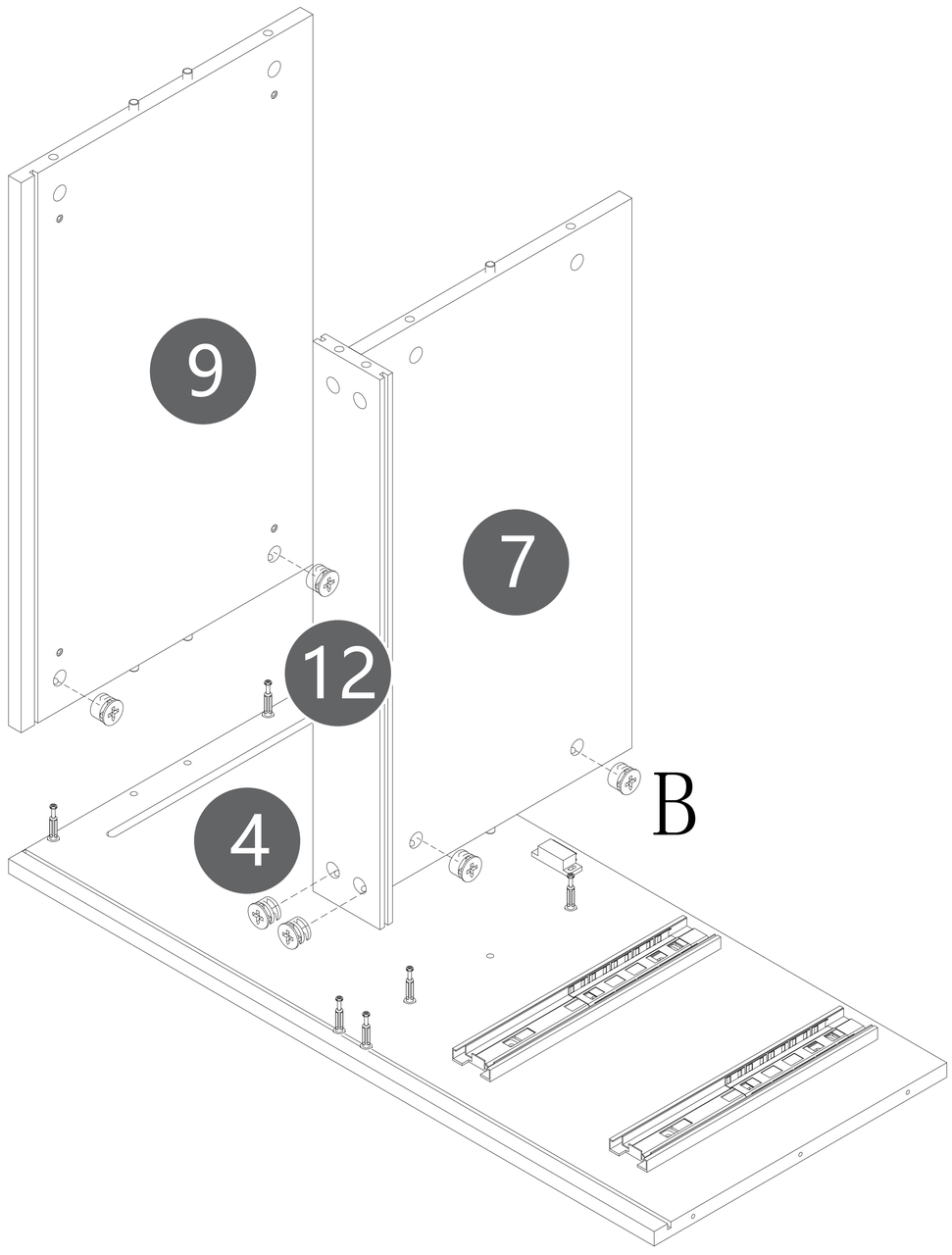

B 6x



09

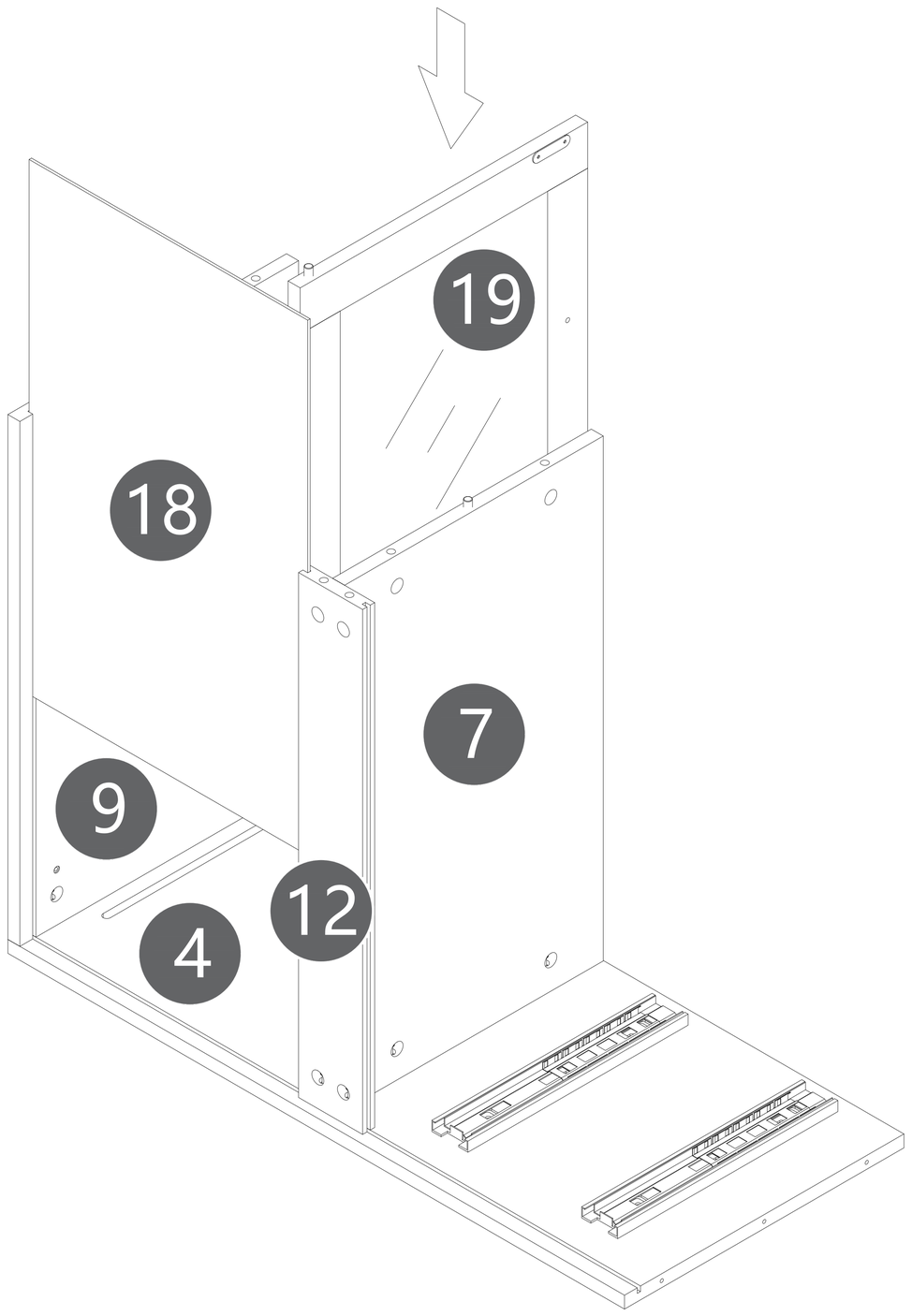

10

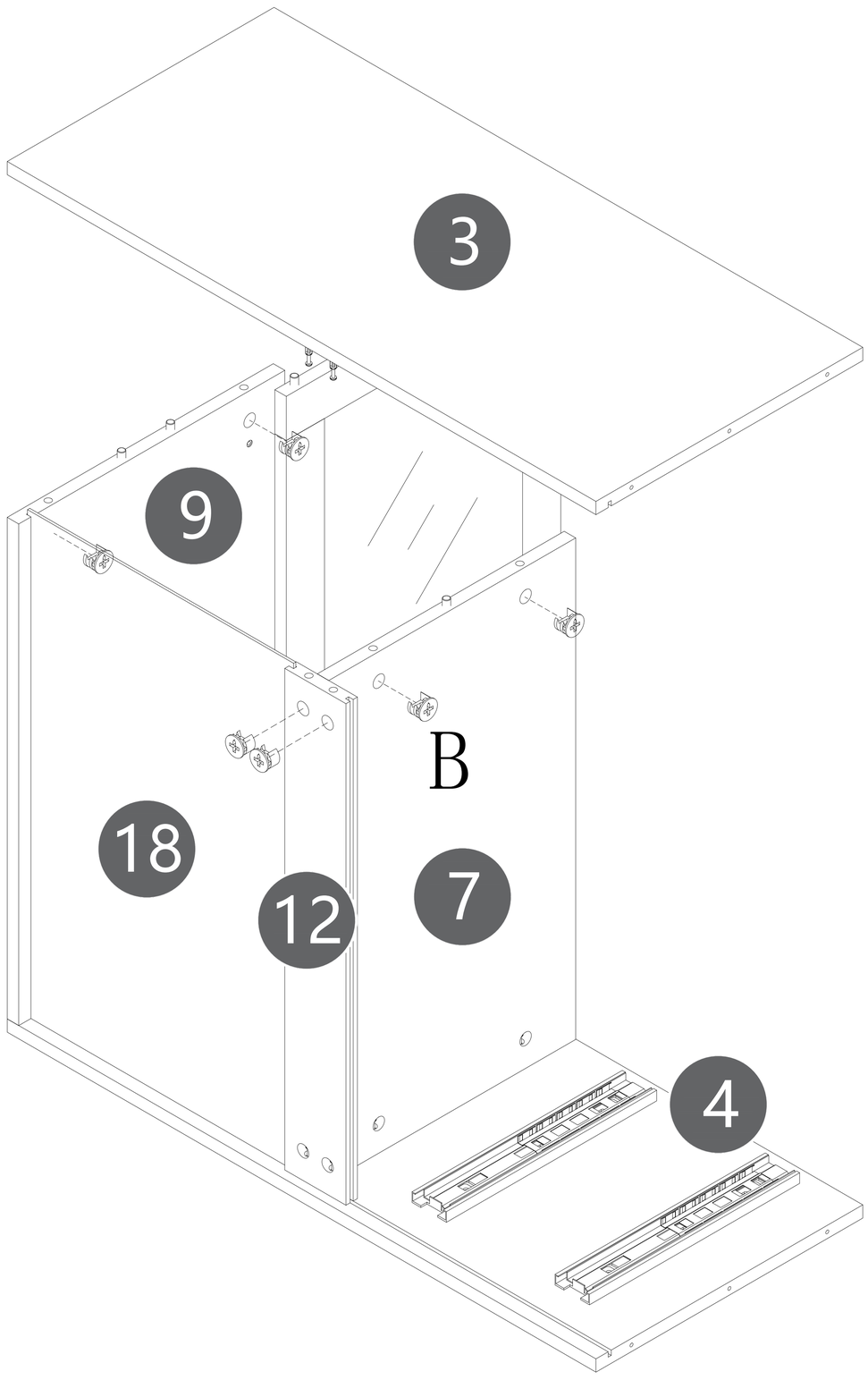

B 6x



11

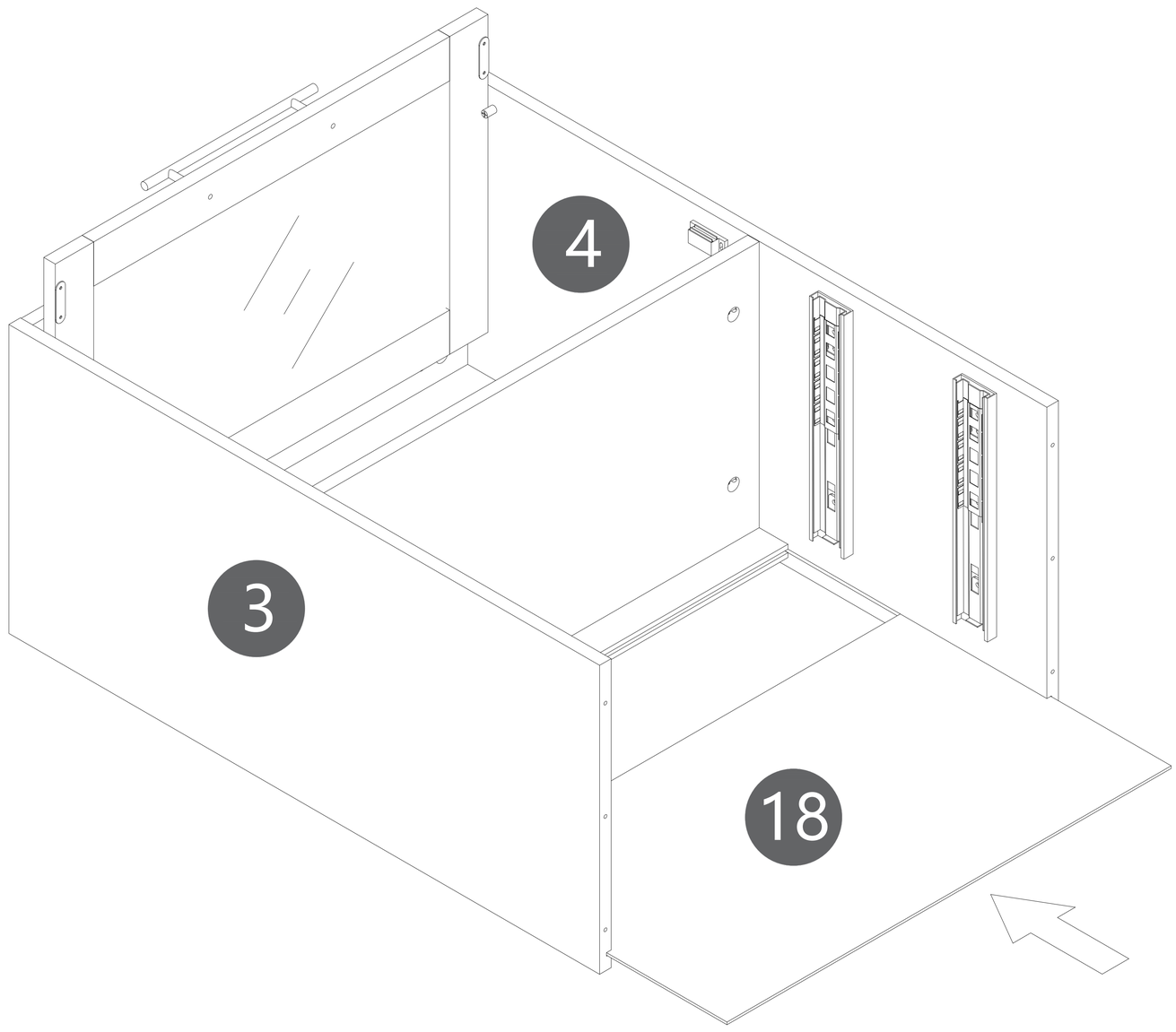

12

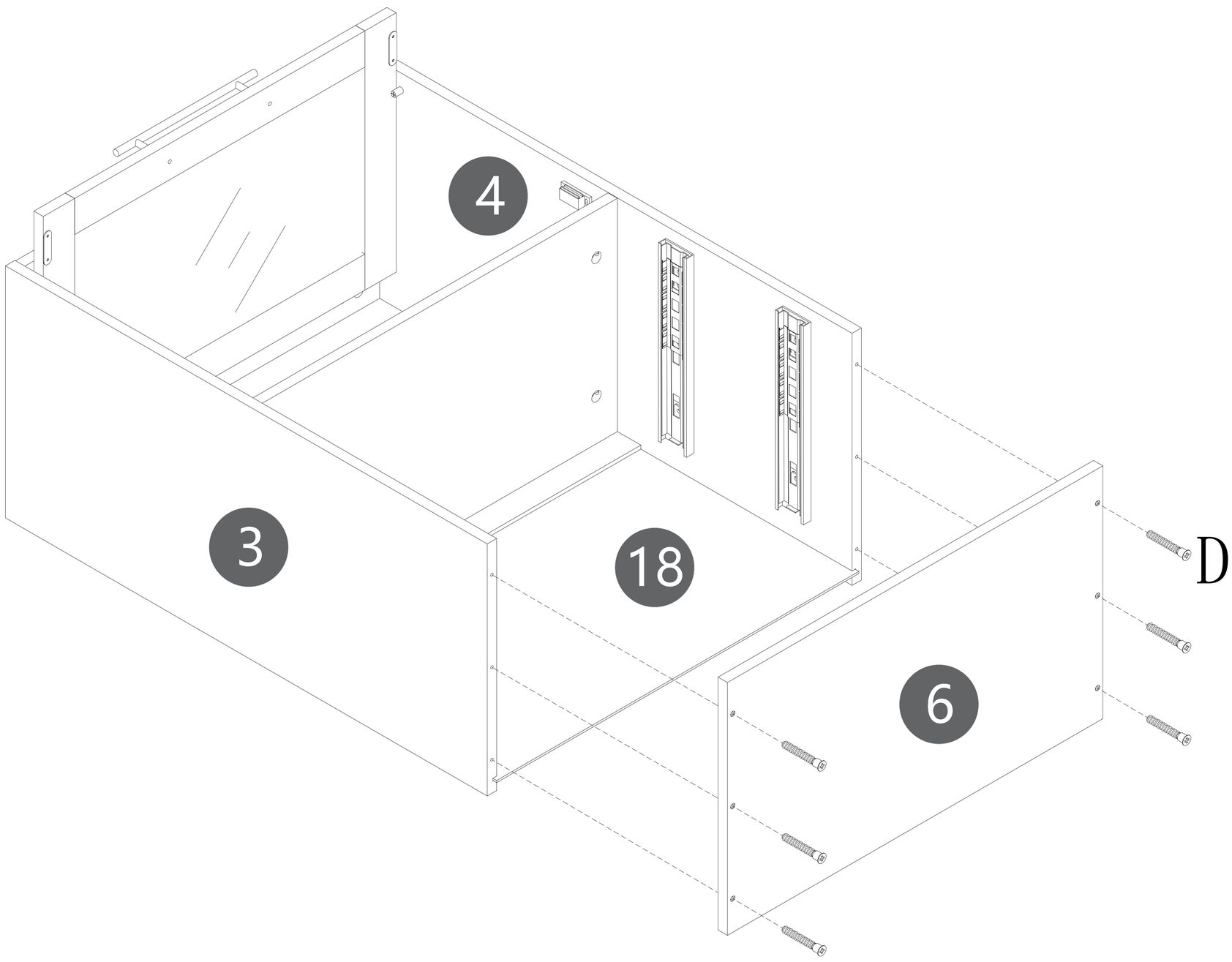

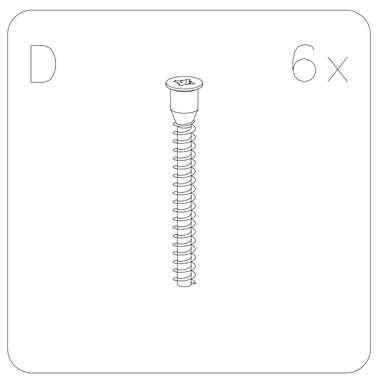

13

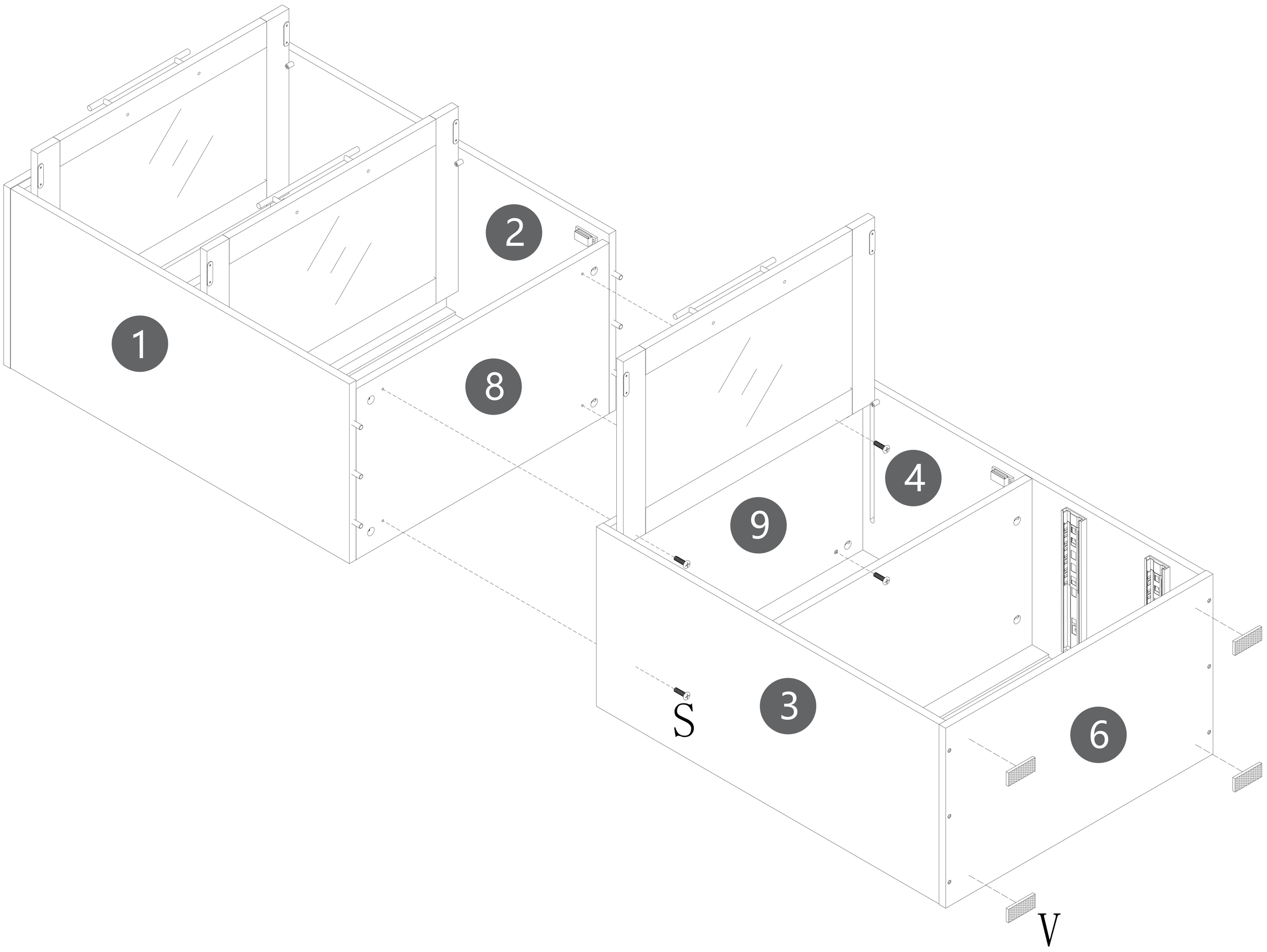

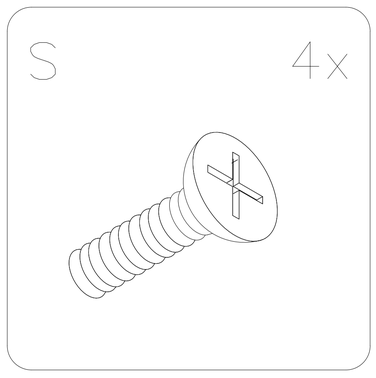

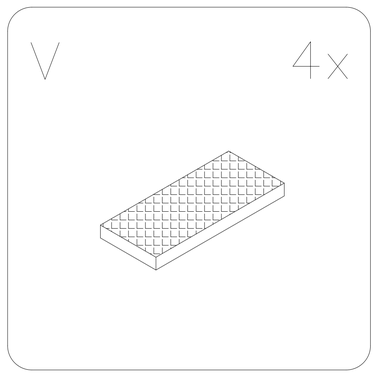

14

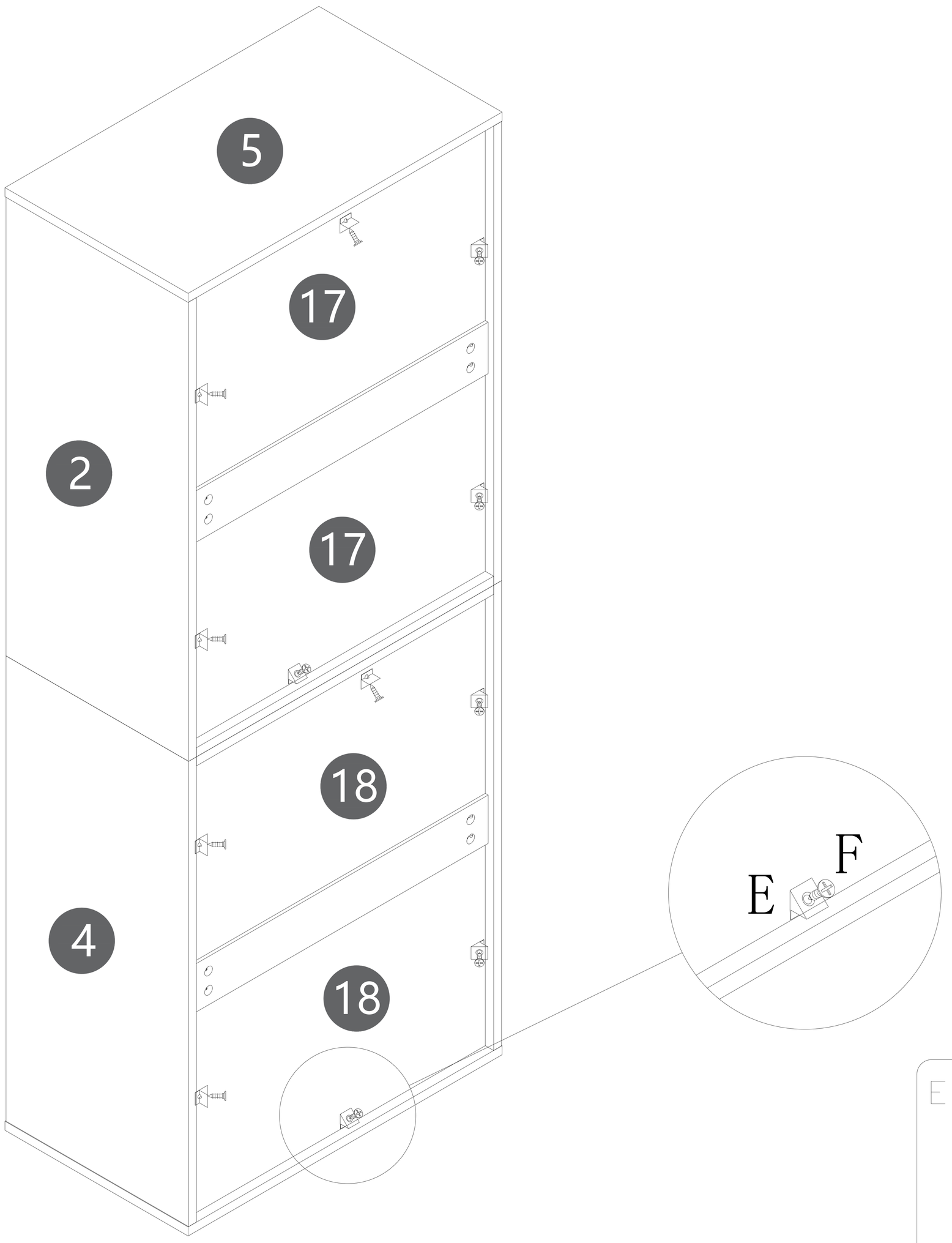

E 12x

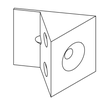

F 12x

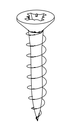

15

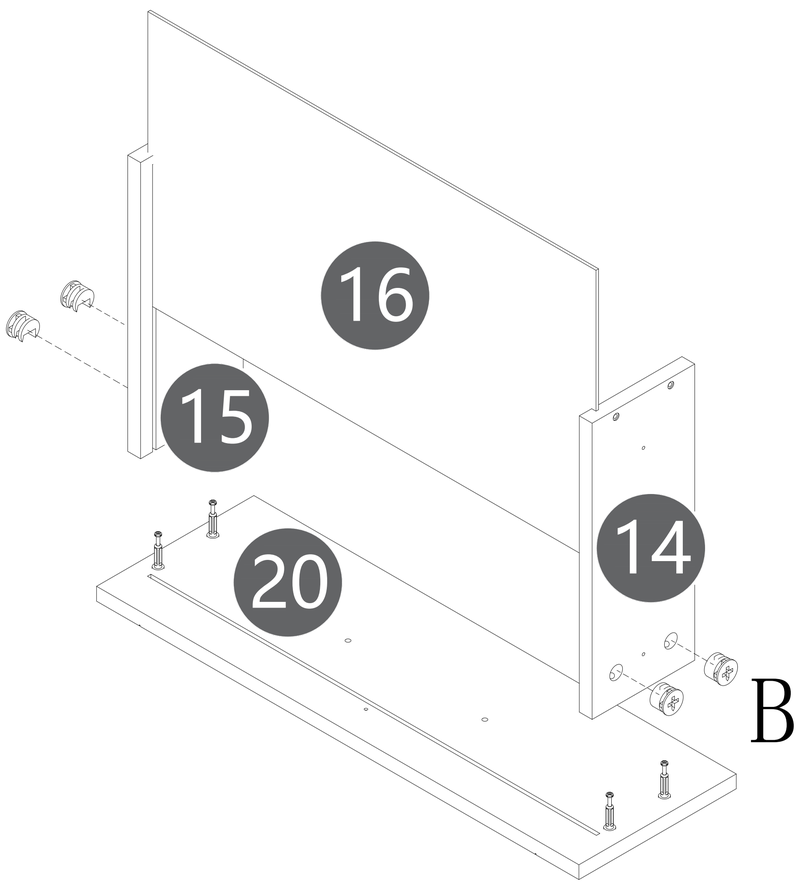

*2

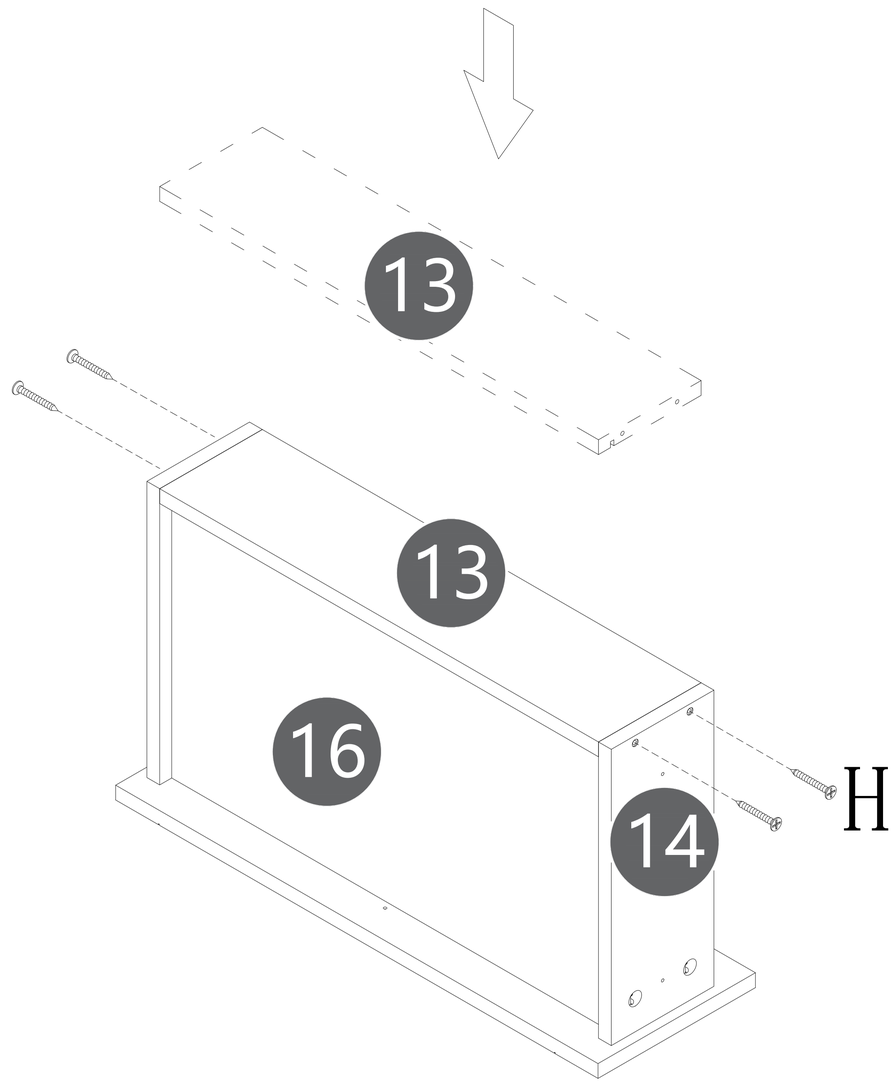

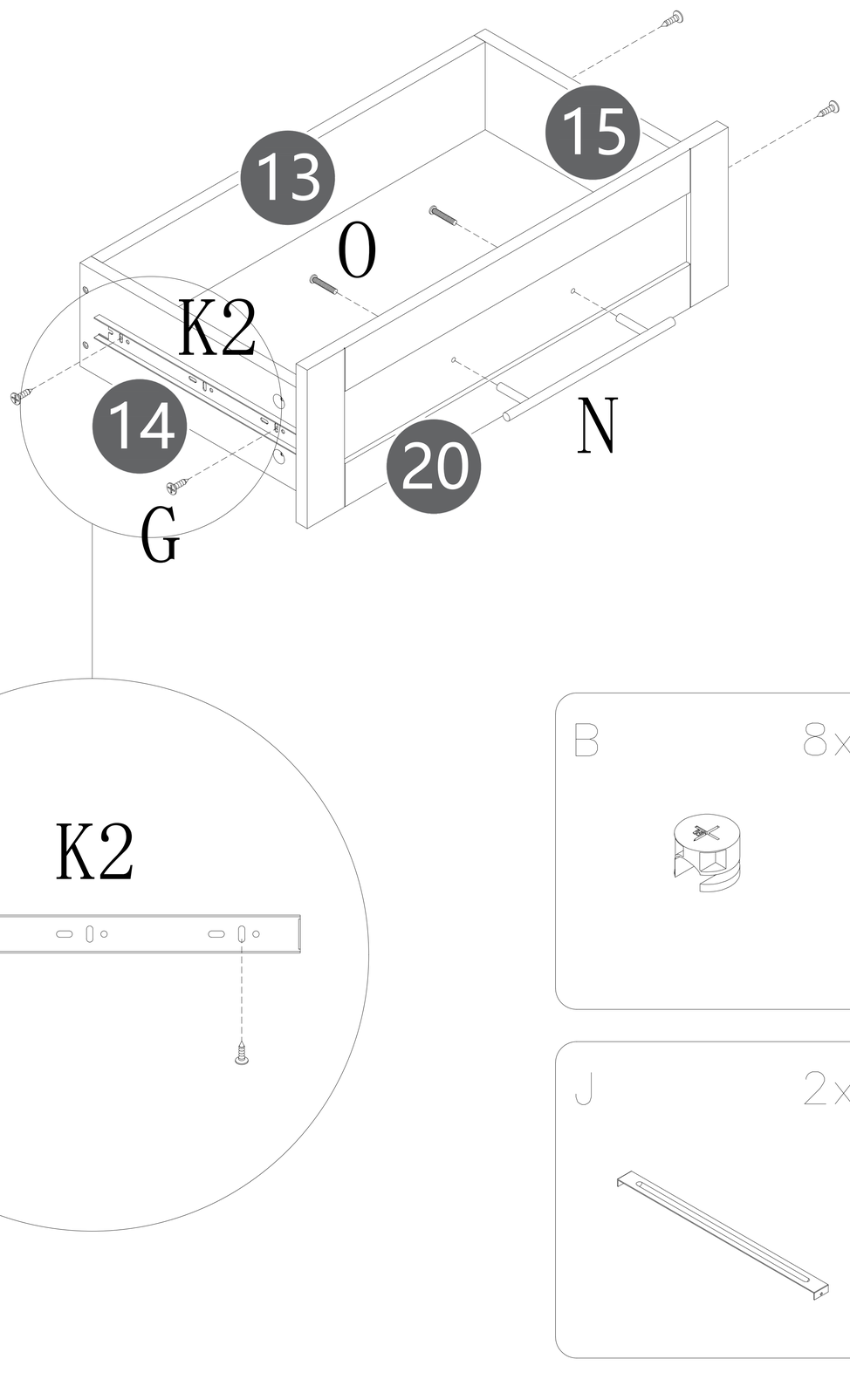

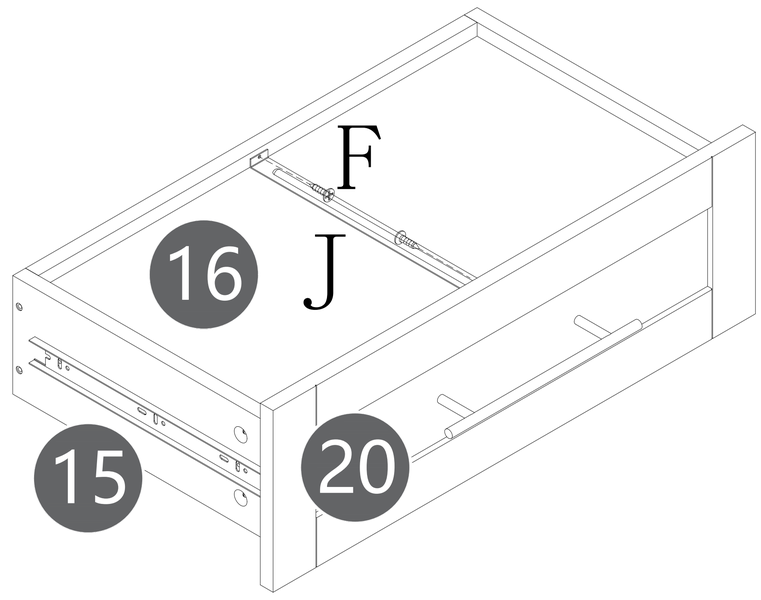

B 8x	F 4x	G 8x	H 8x
J 2x	K2 2x	N 2x	O 4x

16

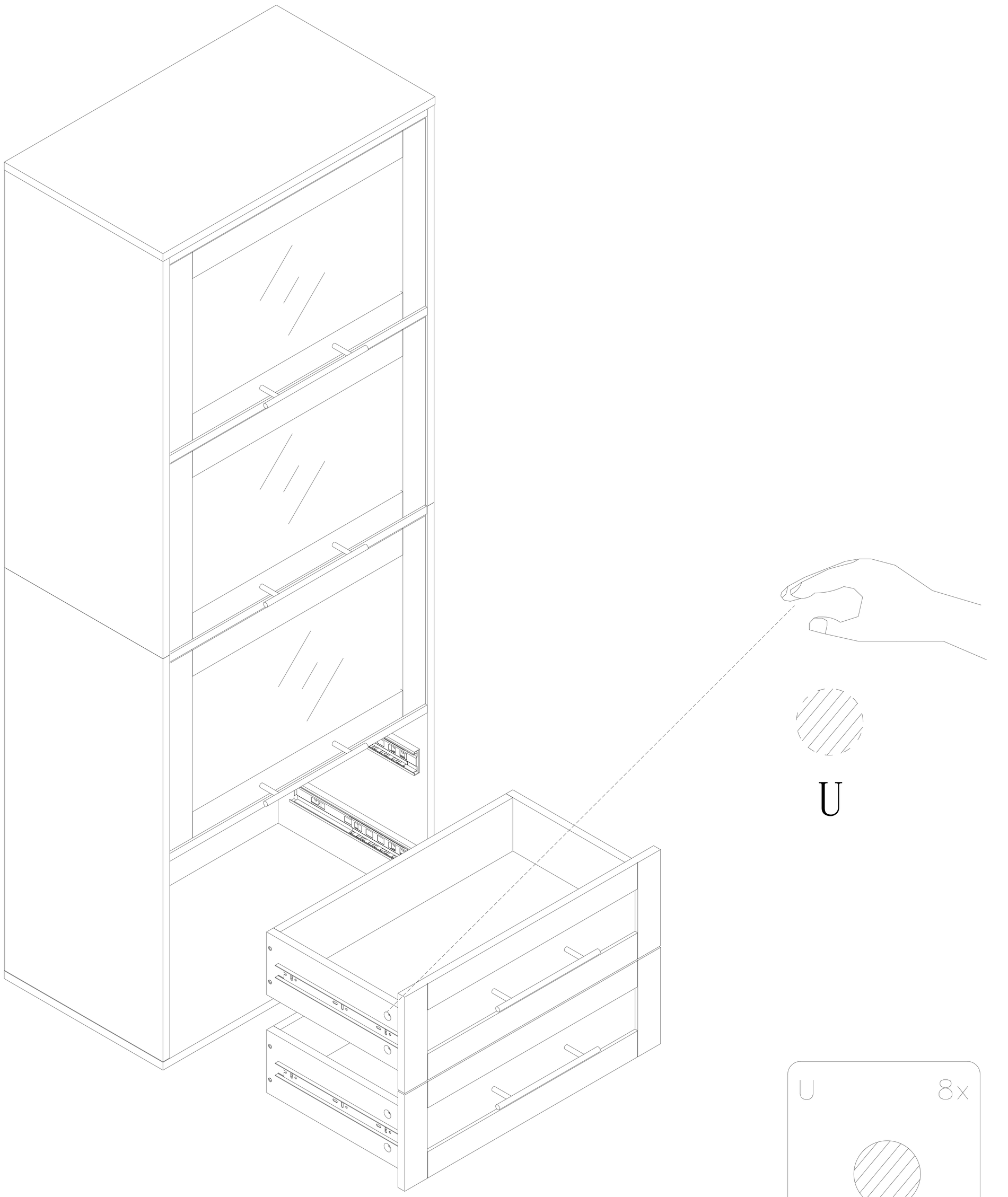

17

